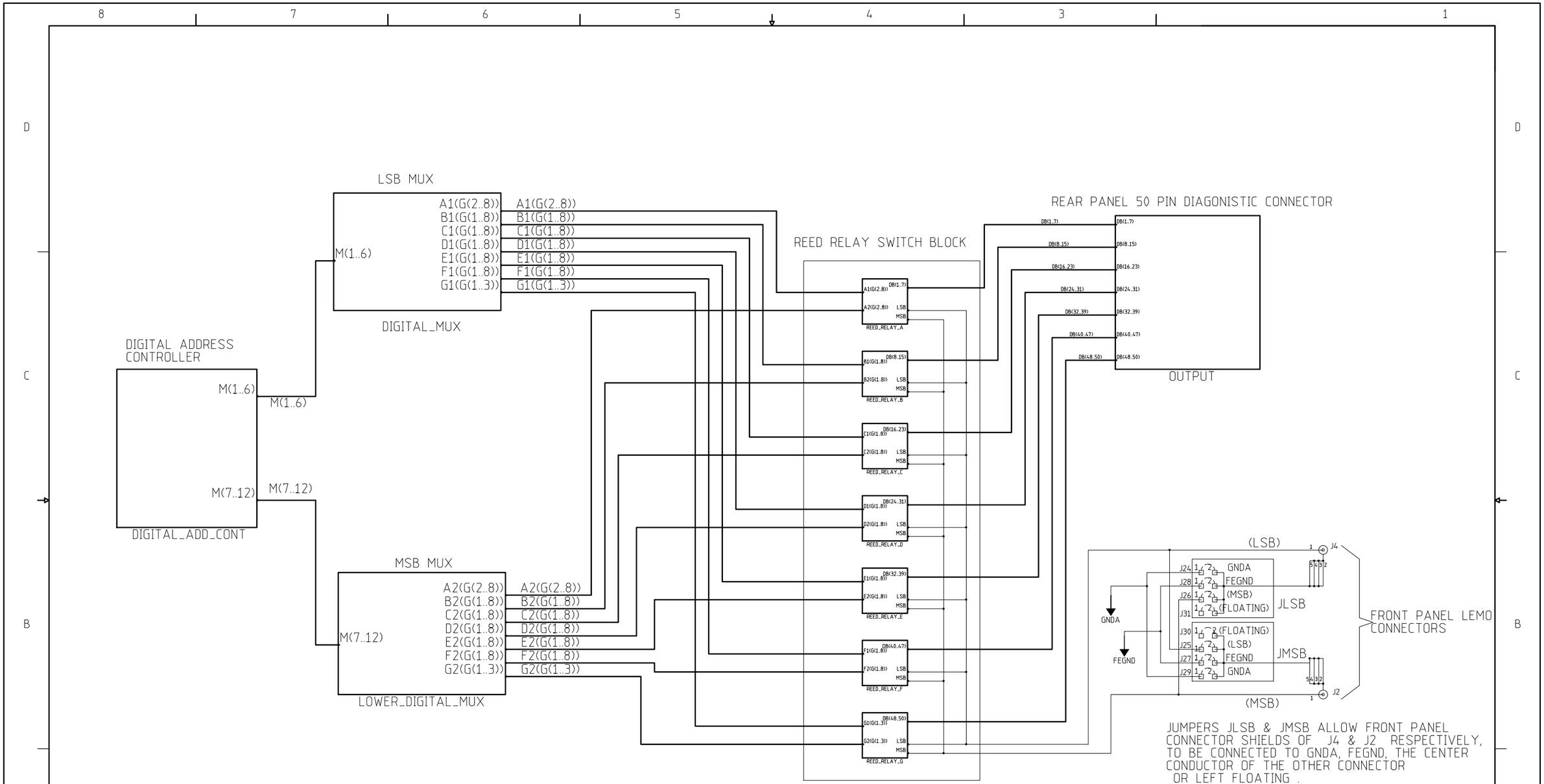

MODFIED 12/11/2002 12:07:03 PM		Hierarchical_Page #Hierarchical_Page Total	
EED Department	ORIGINATOR	M.Haldeman	DATE 9/2002
	DRAWN	N.Moibenko	DATE 10/2002
	CHECKED	M.Haldeman	DATE 10/09/2002
	APPROVED	M.Haldeman	DATE 10/10/2002

Fermi National Accelerator Laboratory
United States Department of Energy

D:\jobs2002\fedup_V2_12_12_2002\fedup_V2\fedup_V2.prj

FRONT END DIAGNOSTIC UNIT PROFILER
BLOCK DIAGRAM

SIZE	DRAWING NUMBER	REV
D	Schematic Page 01 of 01 drawing number	A

H=8ND; V=4LA

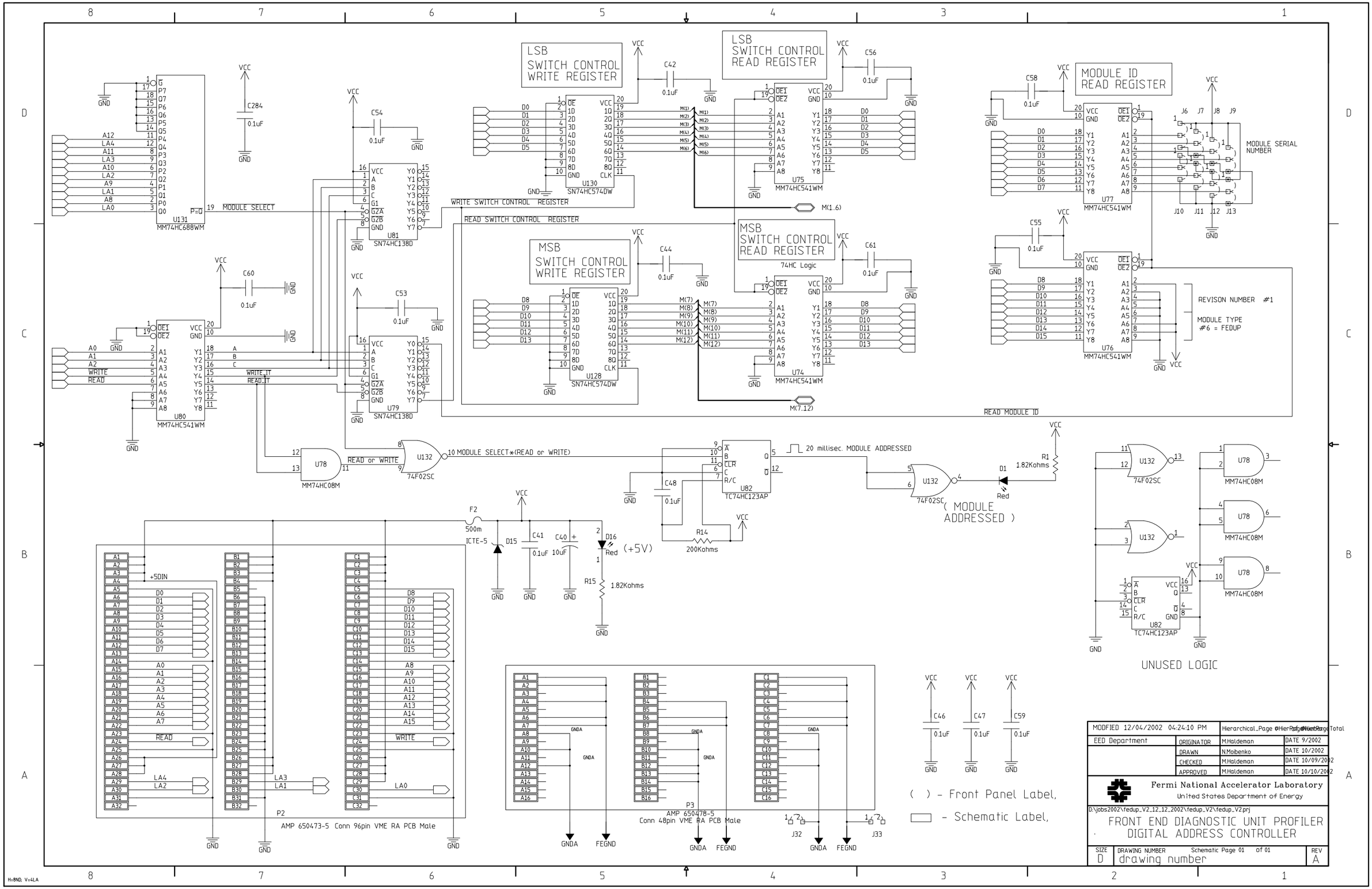
LSB SWITCH CONTROL WRITE REGISTER
LSB SWITCH CONTROL READ REGISTER
MSB SWITCH CONTROL WRITE REGISTER
MSB SWITCH CONTROL READ REGISTER
74HC Logic
MODULE ID READ REGISTER
MODULE SERIAL NUMBER
REVISON NUMBER #1
MODULE TYPE #6 = FEDUP
U131 MM74HC688WM
U130 SN74HC574DW
U75 MM74HC541WM
U81 SN74HC138D
U80 MM74HC541WM
U128 SN74HC574DW
U74 MM74HC541WM
U79 SN74HC138D
U77 MM74HC541WM
U76 MM74HC541WM
MODULE SELECT
WRITE SWITCH CONTROL REGISTER
READ SWITCH CONTROL REGISTER
M(1..6)
M(7..12)
READ MODULE ID
WRITE_IT
READ_IT
U78 MM74HC08M
U132 74F02SC
10 MODULE SELECT*(READ or WRITE)
U82 TC74HC123AP
20 millisec. MODULE ADDRESSED
(MODULE ADDRESSED)
R1 1.82Kohms
D1 Red
F2 500m
ICTE-5
D15
D16 Red
(+5V)
R14 200Kohms
R15 1.82Kohms
+5DIN
P2
AMP 650473-5 Conn 96pin VME RA PCB Male
P3
AMP 650478-5
Conn 48pin VME RA PCB Male
J32
J33
GNDA
FEGND
UNUSED LOGIC
( ) - Front Panel Label,
- Schematic Label,
MODIFIED 12/04/2002 04:24:10 PM
EED Department
ORIGINATOR M.Haldeman DATE 9/2002
DRAWN N.Moibenko DATE 10/2002
CHECKED M.Haldeman DATE 10/09/2002
APPROVED M.Haldeman DATE 10/10/2002
Fermi National Accelerator Laboratory
United States Department of Energy
D:\jobs2002\fedup_V2_12_12_2002\fedup_V2\fedup_V2.prj
FRONT END DIAGNOSTIC UNIT PROFILER
DIGITAL ADDRESS CONTROLLER
SIZE D
DRAWING NUMBER drawing number
Schematic Page 01 of 01
REV A

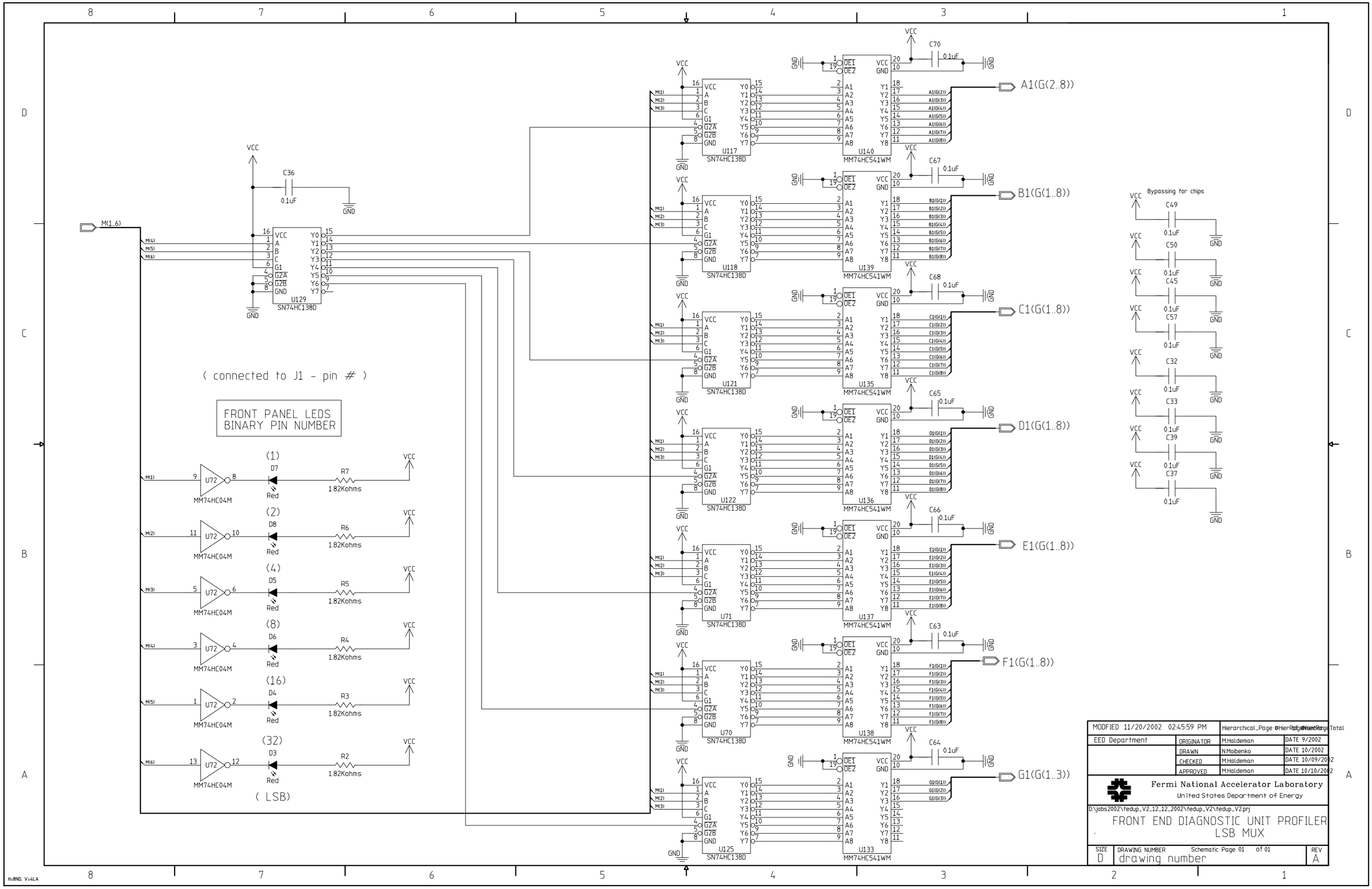
M(1..6)
U129 SN74HC138D
C36 0.1uF
(connected to J1 - pin #)
FRONT PANEL LEDS
BINARY PIN NUMBER
(1) D7 R7 1.82Kohms U72 MM74HC04M Red
(2) D8 R6 1.82Kohms
(4) D5 R5 1.82Kohms
(8) D6 R4 1.82Kohms
(16) D4 R3 1.82Kohms
(32) D3 R2 1.82Kohms
(LSB)
U117 SN74HC138D U140 MM74HC541WM A1(G(2..8))
U118 SN74HC138D U139 MM74HC541WM B1(G(1..8))
U121 SN74HC138D U135 MM74HC541WM C1(G(1..8))
U122 SN74HC138D U136 MM74HC541WM D1(G(1..8))
U71 SN74HC138D U137 MM74HC541WM E1(G(1..8))
U70 SN74HC138D U138 MM74HC541WM F1(G(1..8))
U125 SN74HC138D U133 MM74HC541WM G1(G(1..3))
C70 C67 C68 C65 C66 C63 C64 0.1uF
Bypassing for chips
C49 C50 C45 C57 C32 C33 C39 C37
MODIFIED 11/20/2002 02:45:59 PM
EED Department
ORIGINATOR M.Haldeman DATE 9/2002
DRAWN N.Moibenko DATE 10/2002
CHECKED M.Haldeman DATE 10/09/2002
APPROVED M.Haldeman DATE 10/10/2002
Fermi National Accelerator Laboratory
United States Department of Energy
D:\jobs2002\fedup_V2_12_12_2002\fedup_V2\fedup_V2.prj
FRONT END DIAGNOSTIC UNIT PROFILER
LSB MUX
SIZE D
DRAWING NUMBER drawing number
Schematic Page 01 of 01
REV A
H=BND; V=4LA

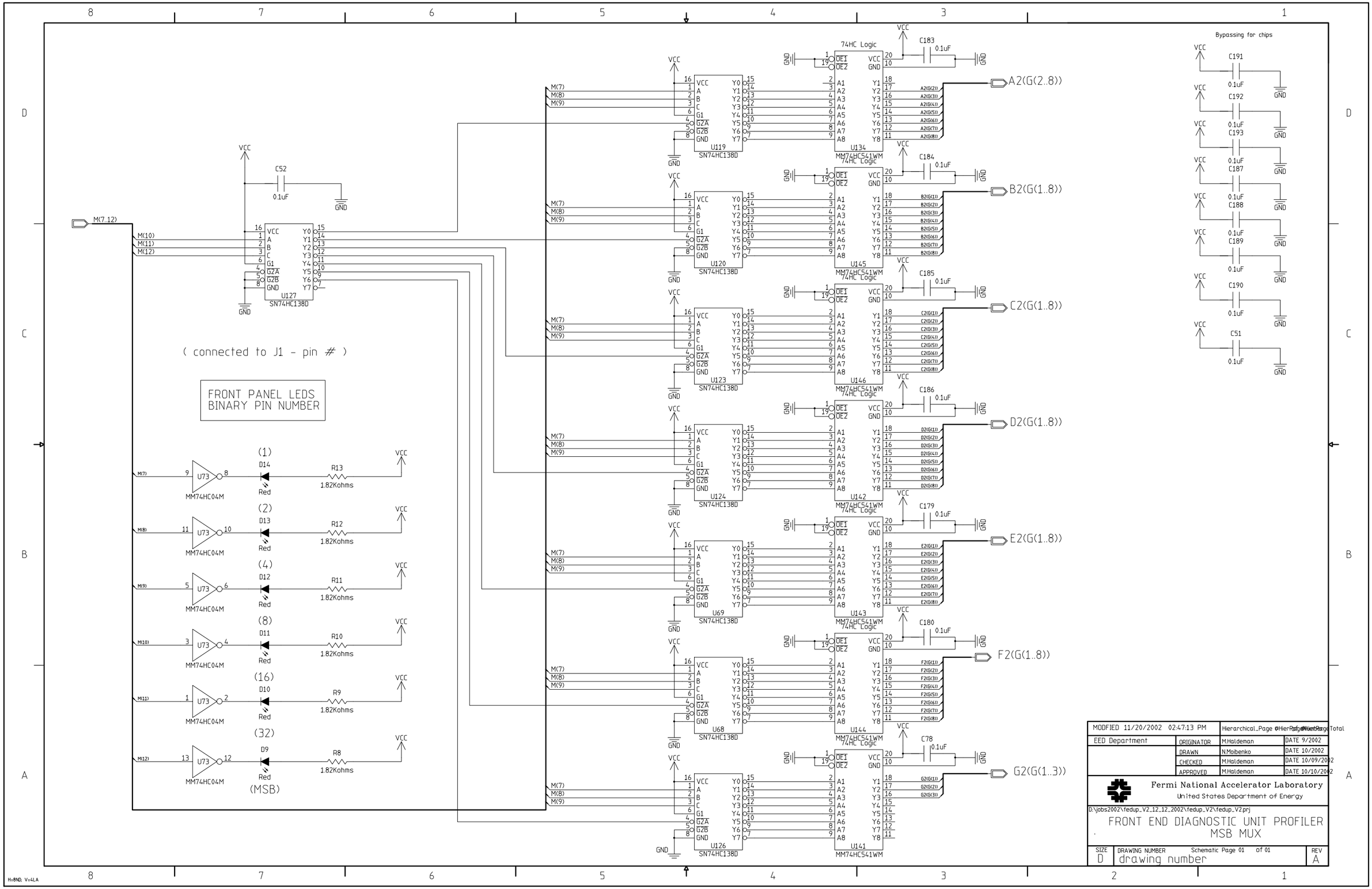
M(7..12)
M(10)
M(11)
M(12)
U127
SN74HC138D
C52
0.1uF
(connected to J1 - pin #)
FRONT PANEL LEDS
BINARY PIN NUMBER
(1)
(2)
(4)
(8)
(16)
(32)
(MSB)
U73
MM74HC04M
D14
D13
D12
D11
D10
D9
Red
R13
R12
R11
R10
R9
R8
1.82Kohms
U119
U120
U123
U124
U69
U68
U126
SN74HC138D
U134
U145
U146
U142
U143
U144
U141
MM74HC541WM
74HC Logic
C183
C184
C185
C186
C179
C180
C78
0.1uF
A2(G(2..8))
B2(G(1..8))
C2(G(1..8))
D2(G(1..8))
E2(G(1..8))
F2(G(1..8))
G2(G(1..3))
Bypassing for chips
C191
C192
C193
C187
C188
C189
C190
C51
MODIFIED 11/20/2002 02:47:13 PM
Hierarchical_Page 01
EED Department
ORIGINATOR M.Haldeman DATE 9/2002
DRAWN N.Moibenko DATE 10/2002
CHECKED M.Haldeman DATE 10/09/2002
APPROVED M.Haldeman DATE 10/10/2002
Fermi National Accelerator Laboratory
United States Department of Energy
D:\jobs2002\fedup_V2_12_12_2002\fedup_V2\fedup_V2.prj
FRONT END DIAGNOSTIC UNIT PROFILER
MSB MUX
SIZE D
DRAWING NUMBER Schematic Page 01 of 01
drawing number
REV A
H=8ND, V=4LA

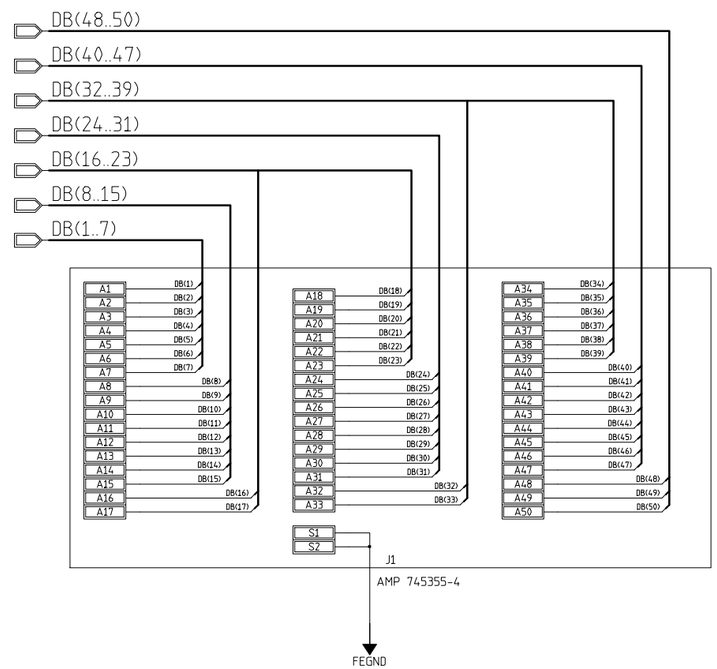

MODFIED 12/05/2002 03:26:40 PM		Hierarchical_Page 01 of 01	Hierarchical_Page Total
EED Department	ORIGINATOR	M.Haldeman	DATE 9/2002
	DRAWN	N.Moibenko	DATE 10/2002
	CHECKED	M.Haldeman	DATE 10/09/2002
	APPROVED	M.Haldeman	DATE 10/10/2002

Fermi National Accelerator Laboratory
United States Department of Energy

D:\jobs2002\fedup_V2_12_12_2002\fedup_V2\fedup_V2.prj

FRONT END DIAGNOSTIC UNIT PROFILER
. 50 PIN D CONNECTOR

SIZE	DRAWING NUMBER	Schematic Page 01 of 01	REV
D	drawing number		A

H=8ND; V=4LA

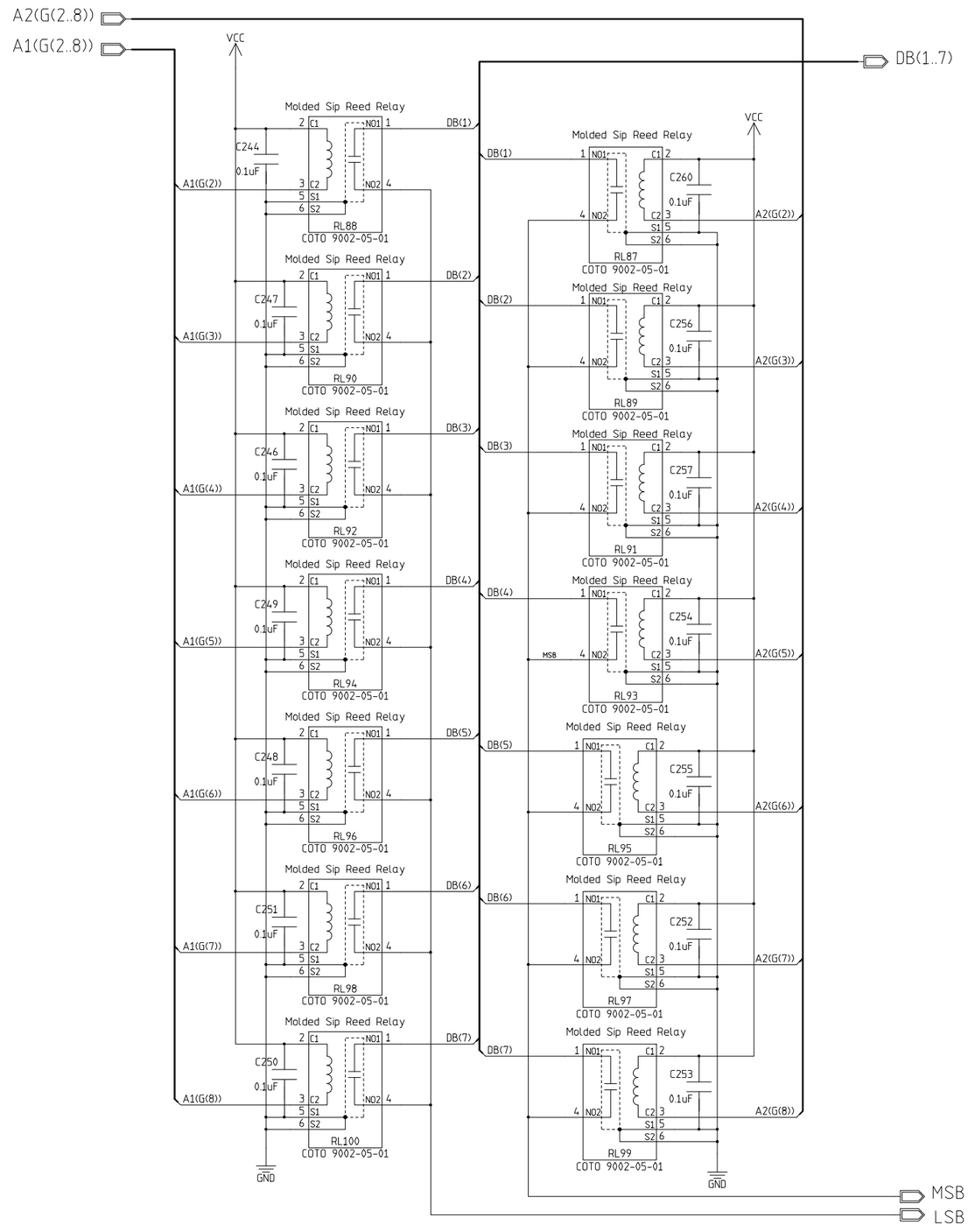

MODIFIED 11/20/2002 10:40:42 AM		Hierarchical_Page #Hierarchical_Page Total	
EED Department	ORIGINATOR	M.Haldeman	DATE 9/2002
	DRAWN	N.Moibenko	DATE 10/2002
	CHECKED	M.Haldeman	DATE 10/09/2002
	APPROVED	M.Haldeman	DATE 10/10/2002

Fermi National Accelerator Laboratory
United States Department of Energy

D:\jobs2002\fedup_V2_12_12_2002\fedup_V2\fedup_V2.prj

.FRONT END DIAGNOSTIC UNIT PROFILER
REED_RELAY_A

SIZE	DRAWING NUMBER	Schematic Page 01 of 01	REV
D	drawing number		A

H=8ND; V=4LA

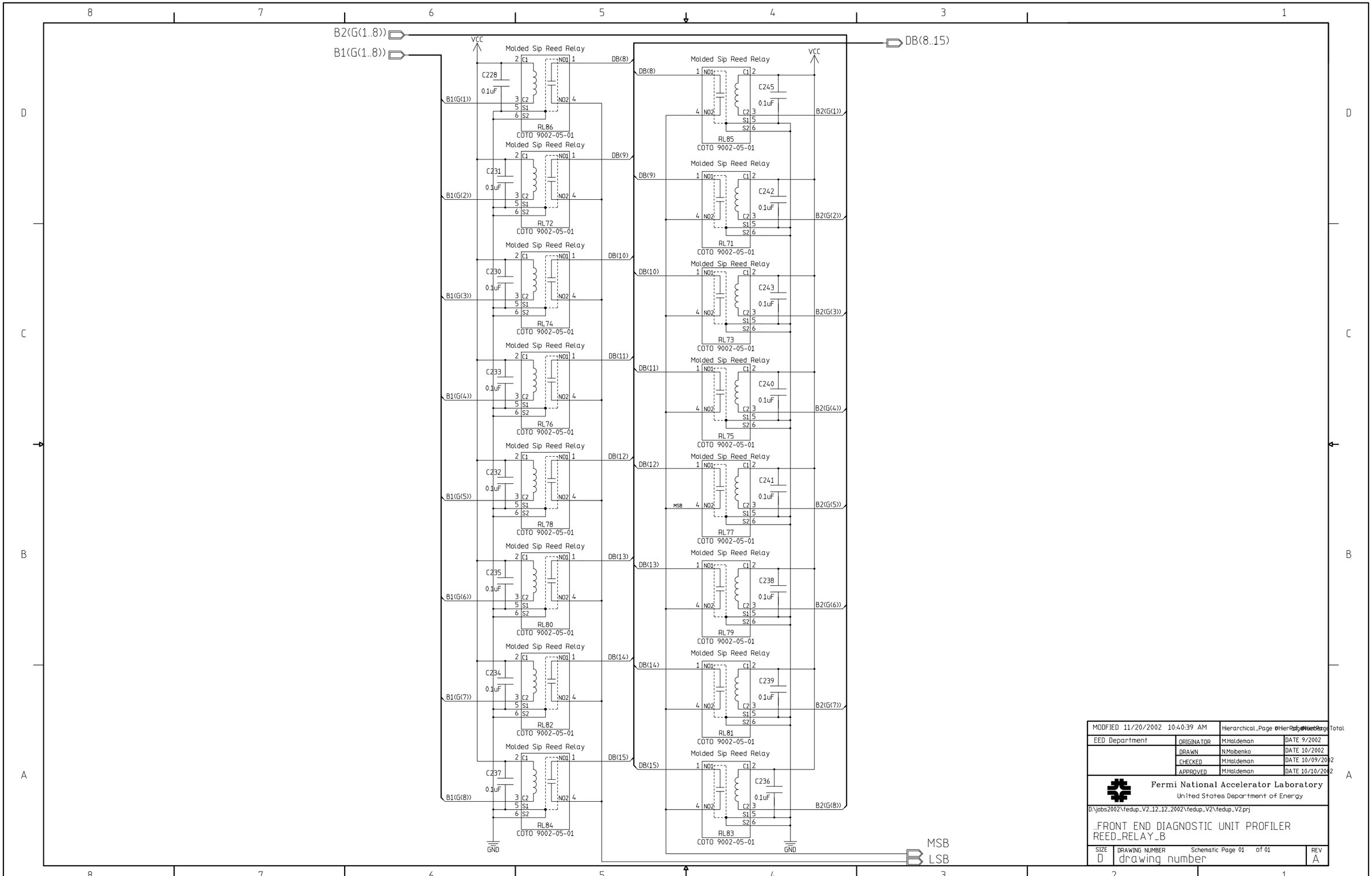

MODFIED 11/20/2002 10:40:39 AM		Hierarchical_Page of Hierarchical_Page Total	
EED Department	ORIGINATOR	M.Haldeman	DATE 9/2002
	DRAWN	N.Moibenko	DATE 10/2002
	CHECKED	M.Haldeman	DATE 10/09/2002
	APPROVED	M.Haldeman	DATE 10/10/2002

Fermi National Accelerator Laboratory
United States Department of Energy

D:\jobs2002\fedup_V2_12_12_2002\fedup_V2\fedup_V2.prj

..FRONT END DIAGNOSTIC UNIT PROFILER
REED_RELAY_B

SIZE	DRAWING NUMBER	Schematic Page 01 of 01	REV
D	drawing number		A

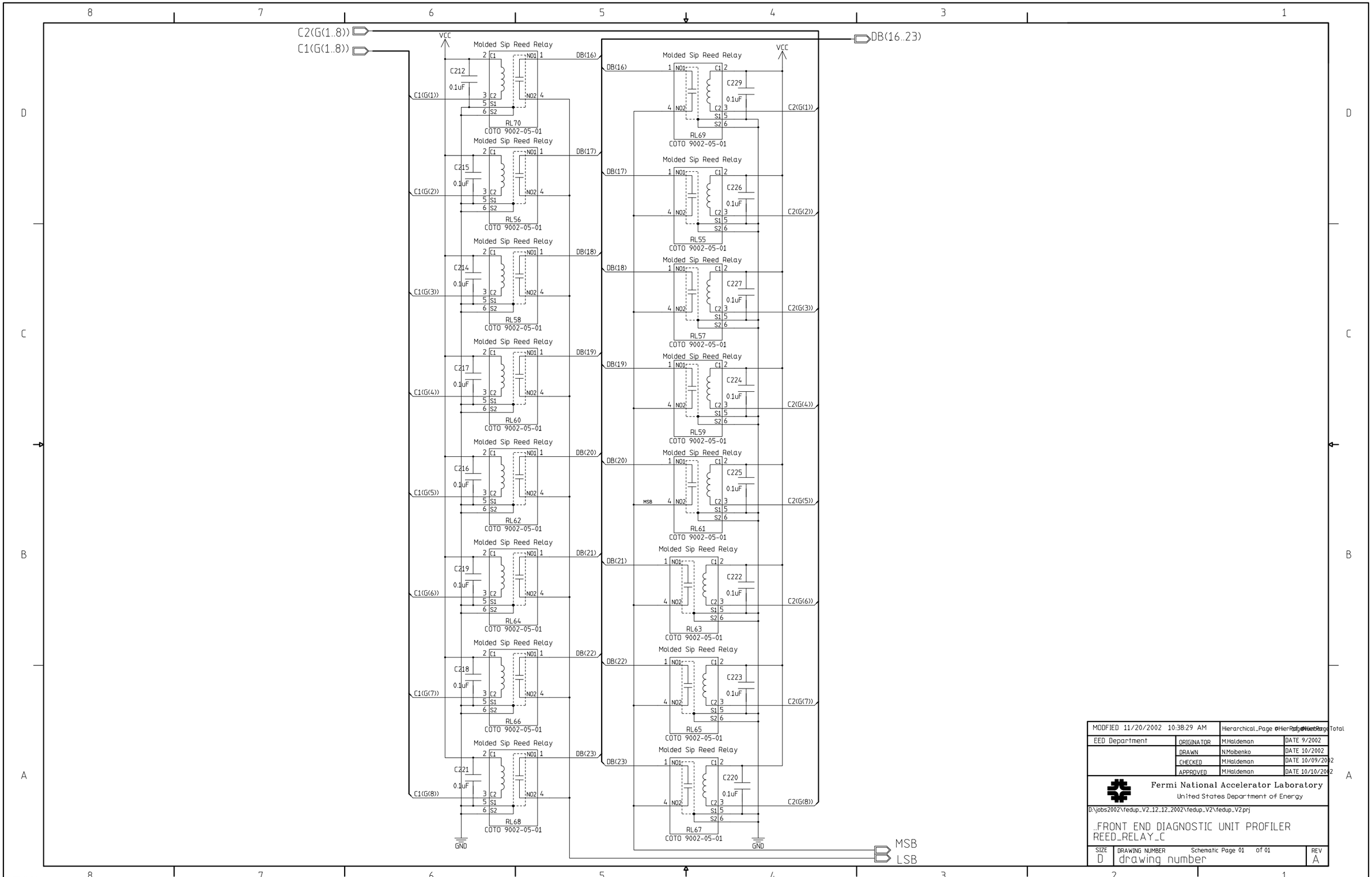

MODFIED 11/20/2002 10:38:29 AM		Hierarchical_Page of Hierarchical_Page Total	
EED Department	ORIGINATOR	M.Haldeman	DATE 9/2002
	DRAWN	N.Moibenko	DATE 10/2002
	CHECKED	M.Haldeman	DATE 10/09/2002
	APPROVED	M.Haldeman	DATE 10/10/2002

Fermi National Accelerator Laboratory
United States Department of Energy

D:\jobs2002\fedup_V2_12_12_2002\fedup_V2\fedup_V2.prj

..FRONT END DIAGNOSTIC UNIT PROFILER
REED_RELAY_C

SIZE	DRAWING NUMBER	Schematic Page 01 of 01	REV
D	drawing number		A

H=8ND; V=4LA

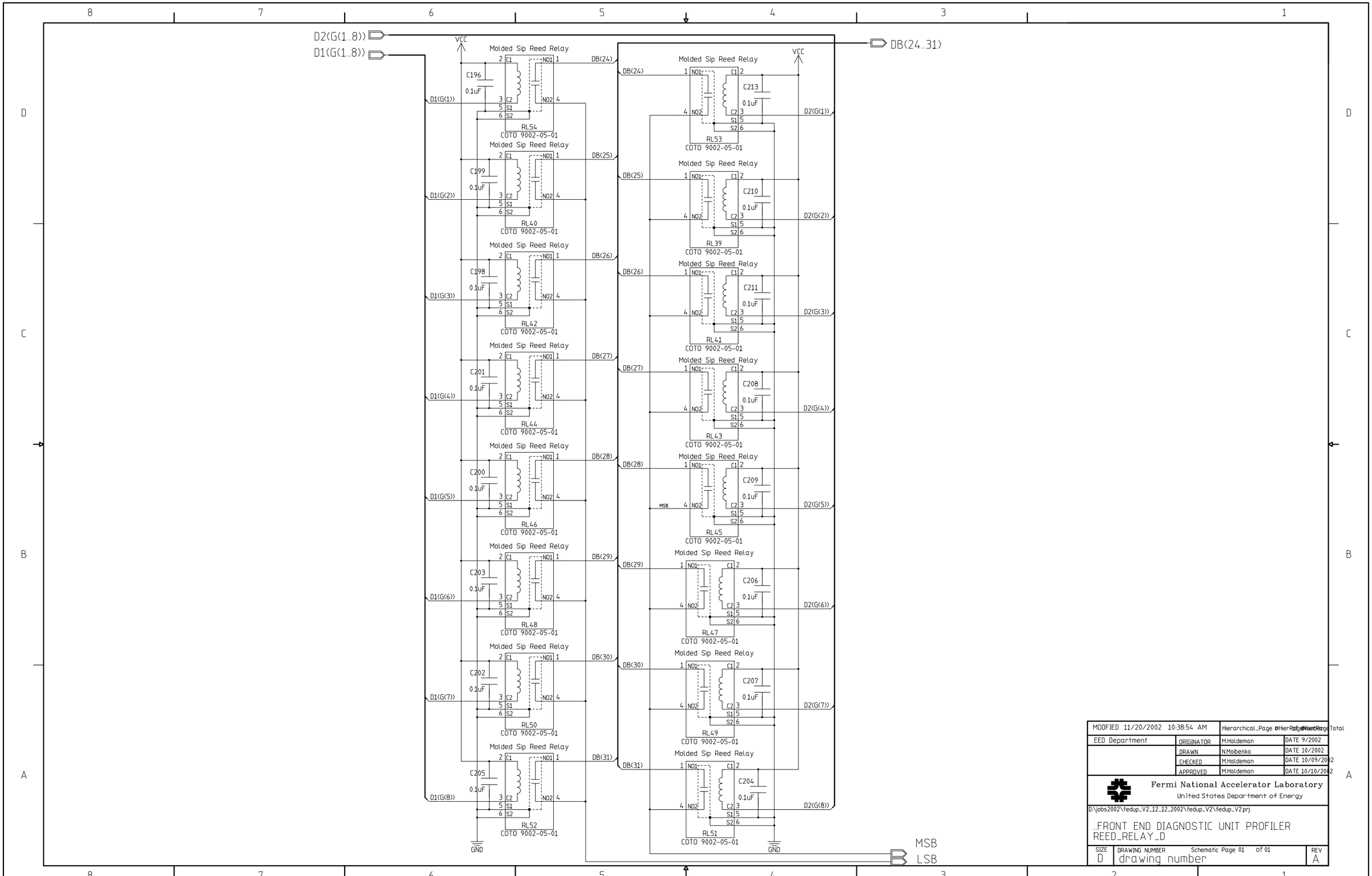

MODIFIED 11/20/2002 10:38:54 AM		Hierarchical_Page 01 of 01	Page Number Page Total
EED Department	ORIGINATOR	M.Haldeman	DATE 9/2002
	DRAWN	N.Moibenko	DATE 10/2002
	CHECKED	M.Haldeman	DATE 10/09/2002
	APPROVED	M.Haldeman	DATE 10/10/2002

Fermi National Accelerator Laboratory
United States Department of Energy

D:\jobs2002\fedup_V2_12_12_2002\fedup_V2\fedup_V2.prj

..FRONT END DIAGNOSTIC UNIT PROFILER
REED_RELAY_D

SIZE	DRAWING NUMBER	Schematic Page 01 of 01	REV
D	drawing number		A

H=8ND; V=4LA

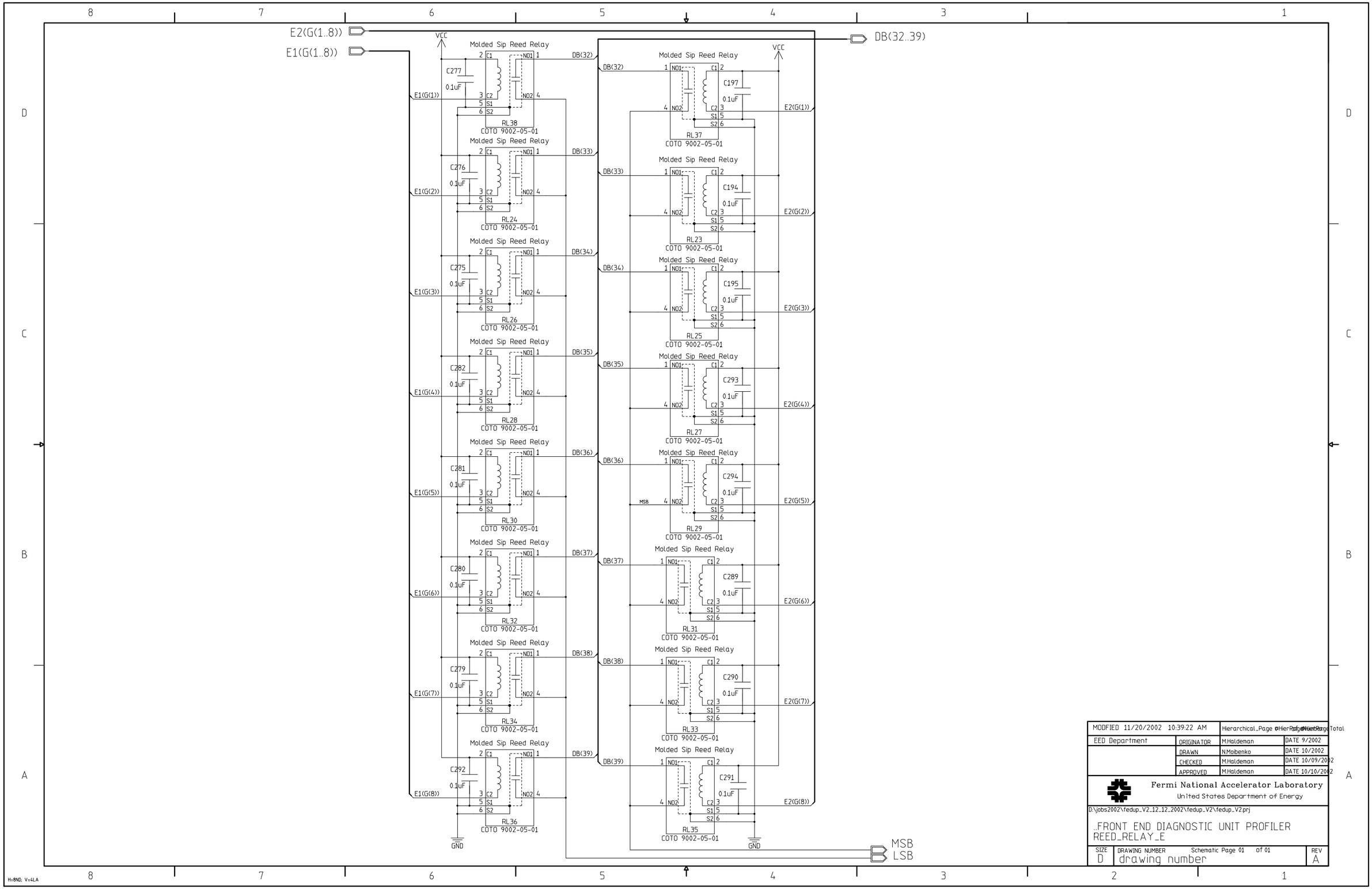
E2(G(1..8))
E1(G(1..8))
DB(32..39)
VCC
Molded Sip Reed Relay
C277
0.1uF
RL38
COTO 9002-05-01
C276
RL24
C275
RL26
C282
RL28
C281
RL30
C280
RL32
C279
RL34
C292
RL36
C197
RL37
C194
RL23
C195
RL25
C293
RL27
C294
RL29
C289
RL31
C290
RL33
C291
RL35
E1(G(1))
E1(G(2))
E1(G(3))
E1(G(4))
E1(G(5))
E1(G(6))
E1(G(7))
E1(G(8))
E2(G(1))
E2(G(2))
E2(G(3))
E2(G(4))
E2(G(5))
E2(G(6))
E2(G(7))
E2(G(8))
DB(32)
DB(33)
DB(34)
DB(35)
DB(36)
DB(37)
DB(38)
DB(39)
MSB
GND
MSB
LSB
MODFIED 11/20/2002 10:39:22 AM
Hierarchical_Page #Hierarchical_Page Total
EED Department
ORIGINATOR M.Haldeman DATE 9/2002
DRAWN N.Moibenko DATE 10/2002
CHECKED M.Haldeman DATE 10/09/2002
APPROVED M.Haldeman DATE 10/10/2002
Fermi National Accelerator Laboratory
United States Department of Energy
D:\jobs2002\fedup_V2_12_12_2002\fedup_V2\fedup_V2.prj
..FRONT END DIAGNOSTIC UNIT PROFILER
REED_RELAY_E
SIZE D
DRAWING NUMBER Schematic Page 01 of 01
drawing number
REV A
H=8ND; V=4LA

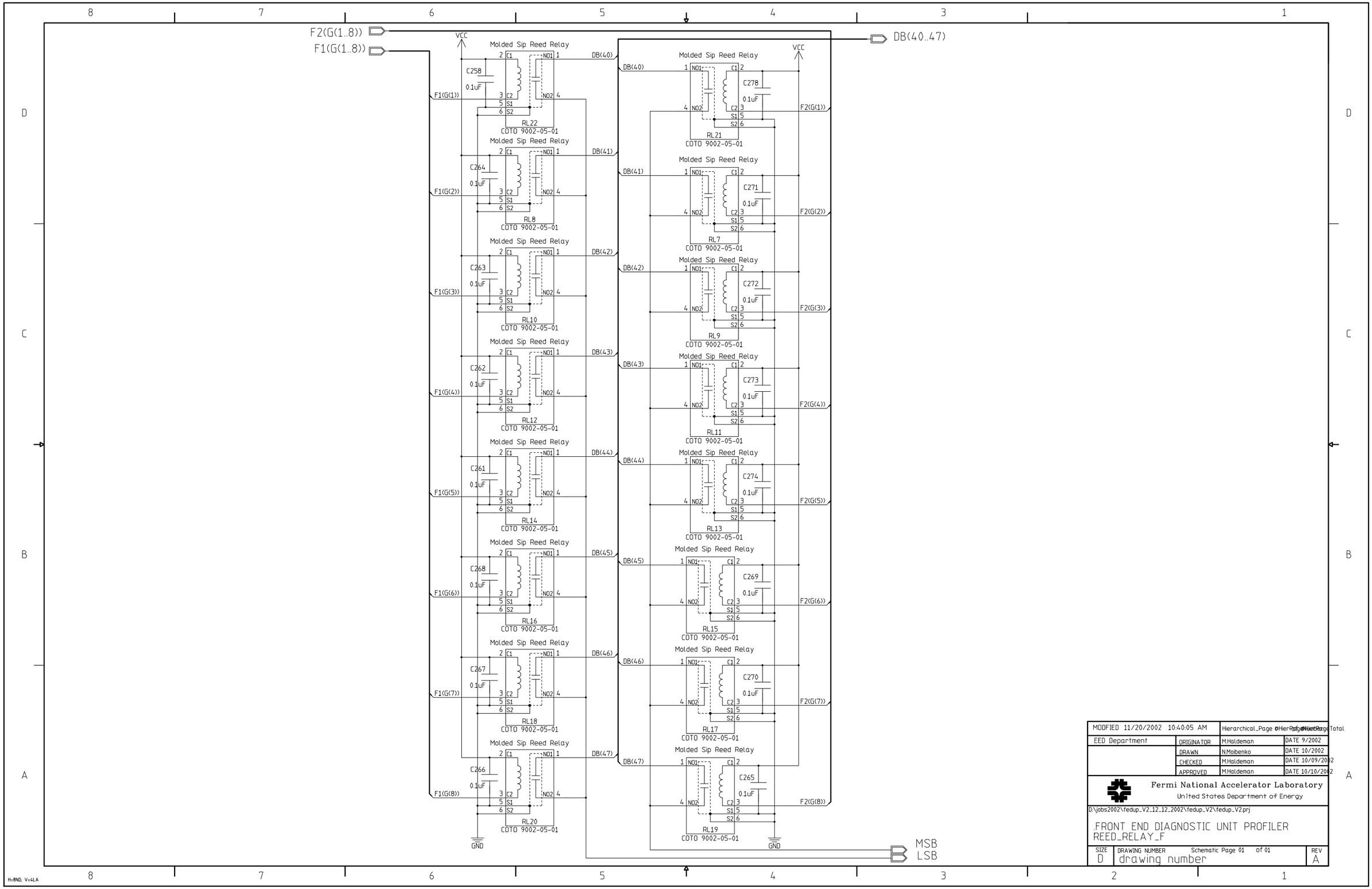
F2(G(1..8))
F1(G(1..8))
DB(40..47)
VCC
Molded Sip Reed Relay
C258
0.1uF
RL22
COTO 9002-05-01
C264
RL8
C263
RL10
C262
RL12
C261
RL14
C268
RL16
C267
RL18
C266
RL20
C278
RL21
C271
RL7
C272
RL9
C273
RL11
C274
RL13
C269
RL15
C270
RL17
C265
RL19
F1(G(1))
F1(G(2))
F1(G(3))
F1(G(4))
F1(G(5))
F1(G(6))
F1(G(7))
F1(G(8))
F2(G(1))
F2(G(2))
F2(G(3))
F2(G(4))
F2(G(5))
F2(G(6))
F2(G(7))
F2(G(8))
DB(40)
DB(41)
DB(42)
DB(43)
DB(44)
DB(45)
DB(46)
DB(47)
GND
MSB
LSB
MODFIED 11/20/2002 10:40:05 AM
Hierarchical_Page 01 of 01 Page Number Page Total
EED Department
ORIGINATOR M.Haldeman DATE 9/2002
DRAWN N.Moibenko DATE 10/2002
CHECKED M.Haldeman DATE 10/09/2002
APPROVED M.Haldeman DATE 10/10/2002
Fermi National Accelerator Laboratory
United States Department of Energy
D:\jobs2002\fedup_V2_12_12_2002\fedup_V2\fedup_V2.prj
FRONT END DIAGNOSTIC UNIT PROFILER
REED_RELAY_F
SIZE D
DRAWING NUMBER Schematic Page 01 of 01
drawing number
REV A
H=8ND; V=4LA

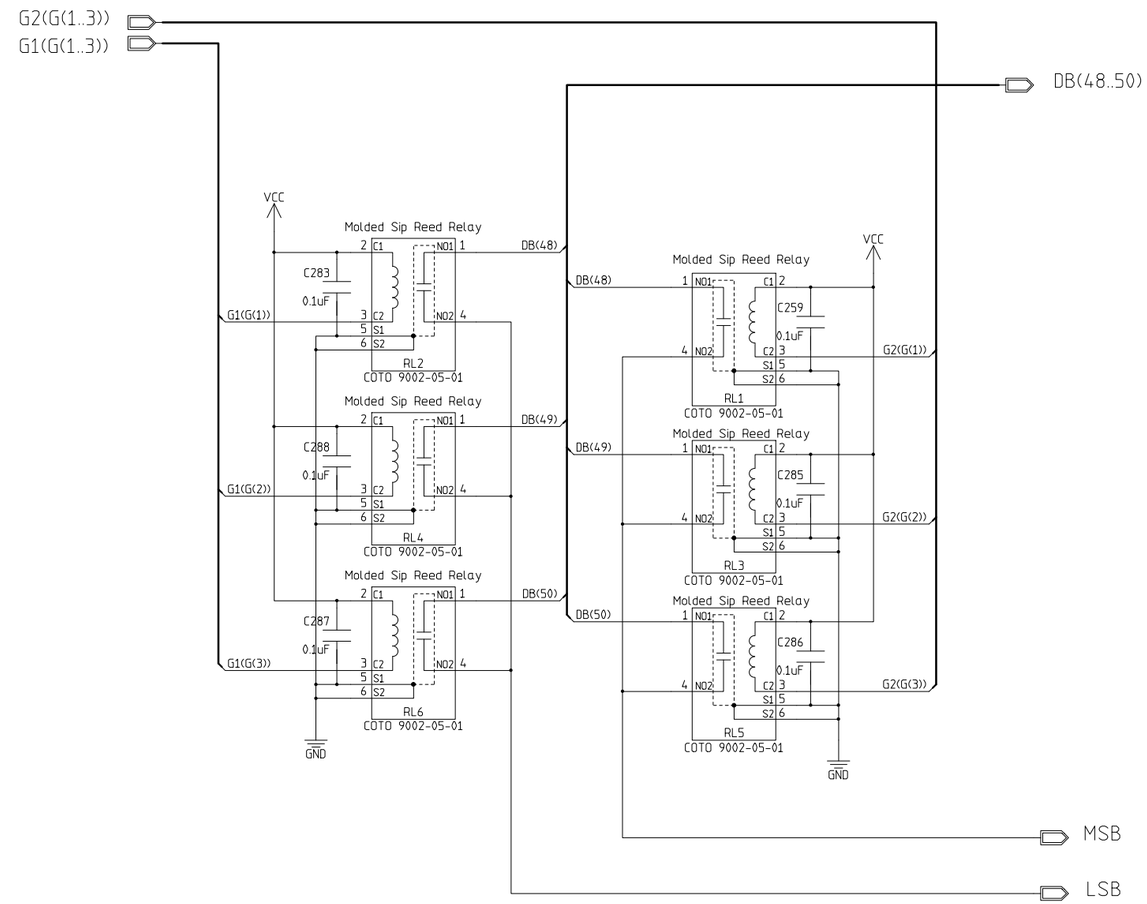

MODFIED 11/20/2002 02:48:19 PM		Hierarchical_Page #Hierarchical_Page Total	
EED Department	ORIGINATOR	M.Haldeman	DATE 9/2002
	DRAWN	N.Moibenko	DATE 10/2002
	CHECKED	M.Haldeman	DATE 10/09/2002
	APPROVED	M.Haldeman	DATE 10/10/2002

Fermi National Accelerator Laboratory
United States Department of Energy

D:\jobs2002\fedup_V2_12_12_2002\fedup_V2\fedup_V2.prj

.FRONT END DIAGNOSTIC UNIT PROFILER
REED_RELAY_G.

SIZE	DRAWING NUMBER	Schematic Page 01 of 01	REV
D	drawing number		A

H=8ND; V=4LA