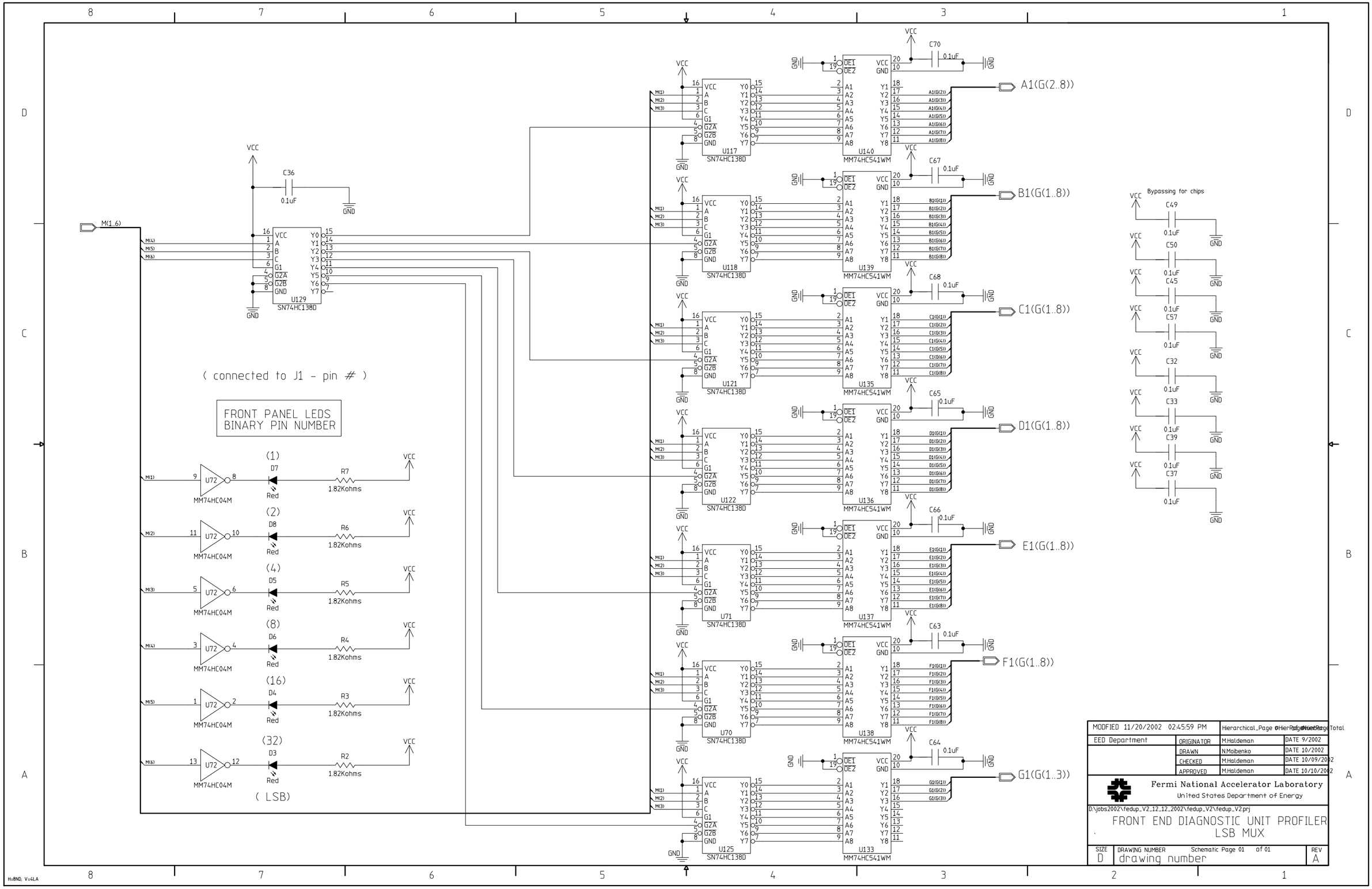
M(1..6)
U129 SN74HC138D
C36 0.1uF
(connected to J1 - pin #)
FRONT PANEL LEDS
BINARY PIN NUMBER
(1) D7 R7 1.82Kohms U72 MM74HC04M Red
(2) D8 R6 1.82Kohms
(4) D5 R5 1.82Kohms
(8) D6 R4 1.82Kohms
(16) D4 R3 1.82Kohms
(32) D3 R2 1.82Kohms
(LSB)
U117 SN74HC138D U140 MM74HC541WM A1(G(2..8))
U118 SN74HC138D U139 MM74HC541WM B1(G(1..8))
U121 SN74HC138D U135 MM74HC541WM C1(G(1..8))
U122 SN74HC138D U136 MM74HC541WM D1(G(1..8))
U71 SN74HC138D U137 MM74HC541WM E1(G(1..8))
U70 SN74HC138D U138 MM74HC541WM F1(G(1..8))
U125 SN74HC138D U133 MM74HC541WM G1(G(1..3))
C70 C67 C68 C65 C66 C63 C64 0.1uF
Bypassing for chips
C49 C50 C45 C57 C32 C33 C39 C37
MODIFIED 11/20/2002 02:45:59 PM
EED Department
ORIGINATOR M.Haldeman DATE 9/2002
DRAWN N.Moibenko DATE 10/2002
CHECKED M.Haldeman DATE 10/09/2002
APPROVED M.Haldeman DATE 10/10/2002
Fermi National Accelerator Laboratory
United States Department of Energy
D:\jobs2002\fedup_V2_12_12_2002\fedup_V2\fedup_V2.prj
FRONT END DIAGNOSTIC UNIT PROFILER
LSB MUX
SIZE D
DRAWING NUMBER drawing number
Schematic Page 01 of 01
REV A
H=BND; V=4LA