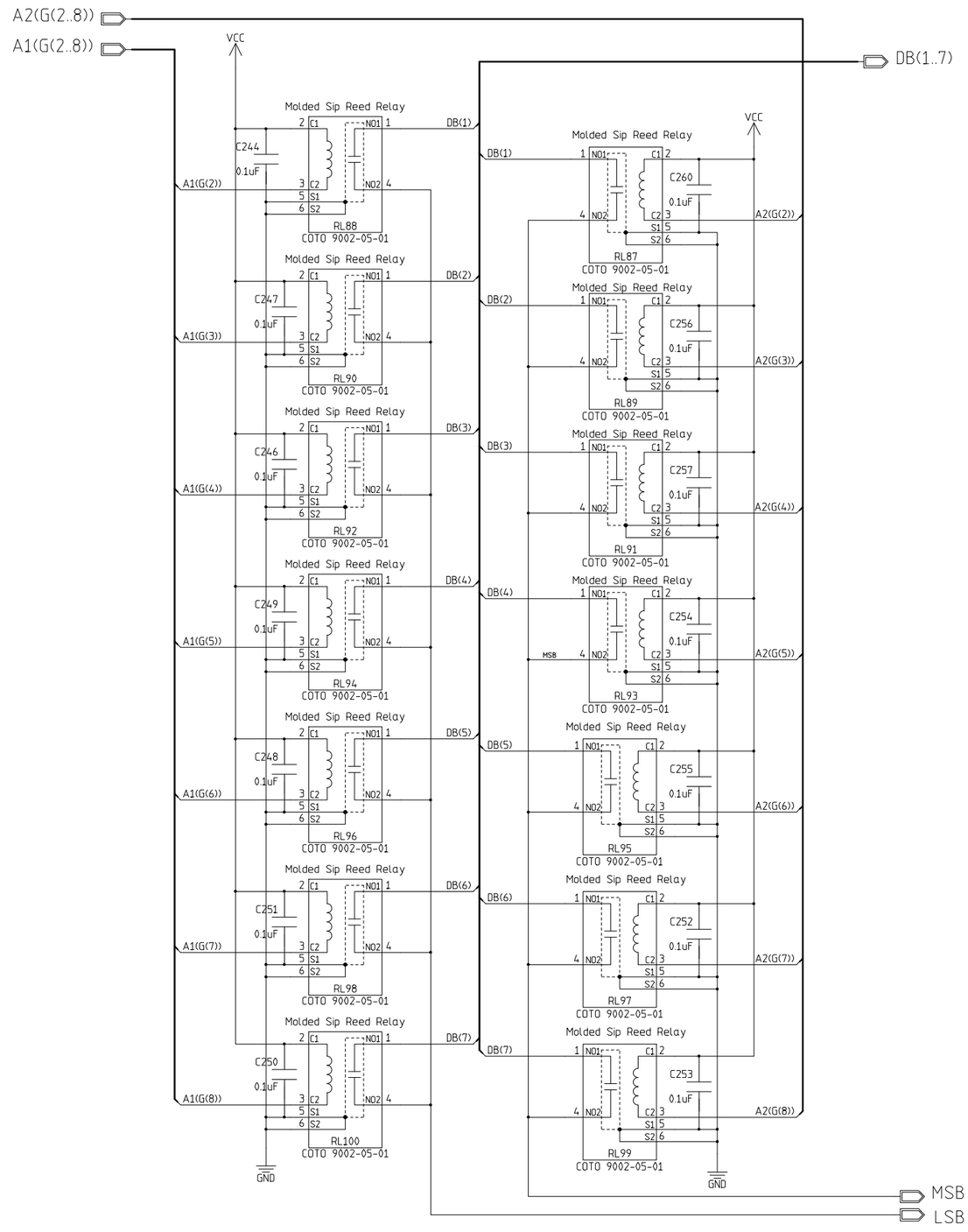

MODIFIED 11/20/2002 10:40:42 AM		Hierarchical_Page #Hierarchical_Page Total	
EED Department	ORIGINATOR	M.Haldeman	DATE 9/2002
	DRAWN	N.Moibenko	DATE 10/2002
	CHECKED	M.Haldeman	DATE 10/09/2002
	APPROVED	M.Haldeman	DATE 10/10/2002

Fermi National Accelerator Laboratory
United States Department of Energy

D:\jobs2002\fedup_V2_12_12_2002\fedup_V2\fedup_V2.prj

.FRONT END DIAGNOSTIC UNIT PROFILER
REED_RELAY_A

SIZE	DRAWING NUMBER	Schematic Page 01 of 01	REV
D	drawing number		A

H=8ND; V=4LA