CDMS Power Supply Logic Control

10 Position Selector Switches: Bourns 7643G-1-010
Push Button Switch: Panasonic EVQ-PF008K
Inverters: MM74HC04MTC
AND gates: MM74HC08MTC

Each I.C. must have a 0.1 uF ceramic capacitor between the Vcc pin and the ground pin.

All resistors are +/- 1% unless otherwise specified.

All logic statements are "High true".

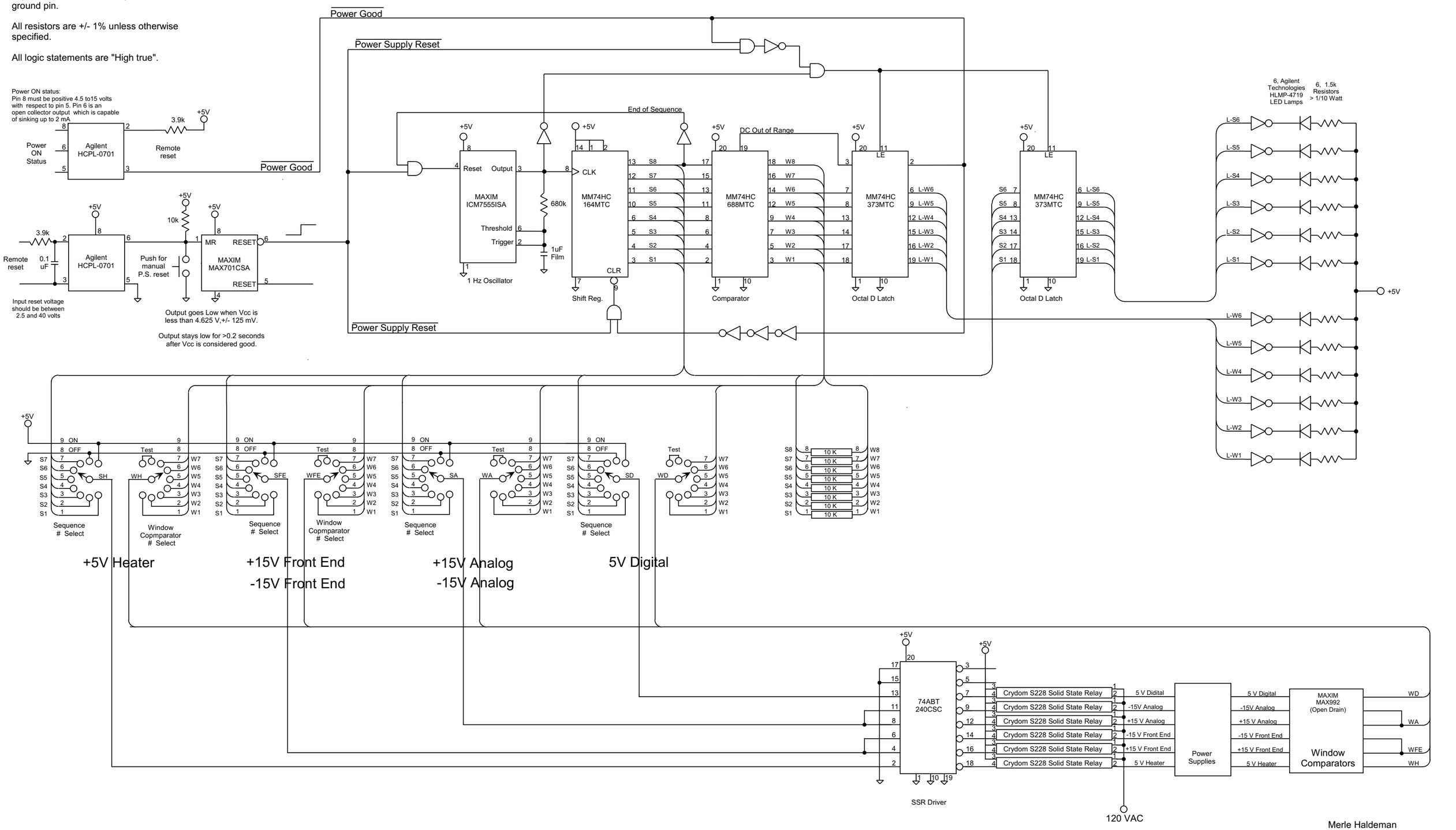

Merle Haldeman
Created 10/10/2000
Revised 12/15/2000 (Sourobh)