REV.	DESCRIPTION	DRAWN	DATE
		APPD.	DATE

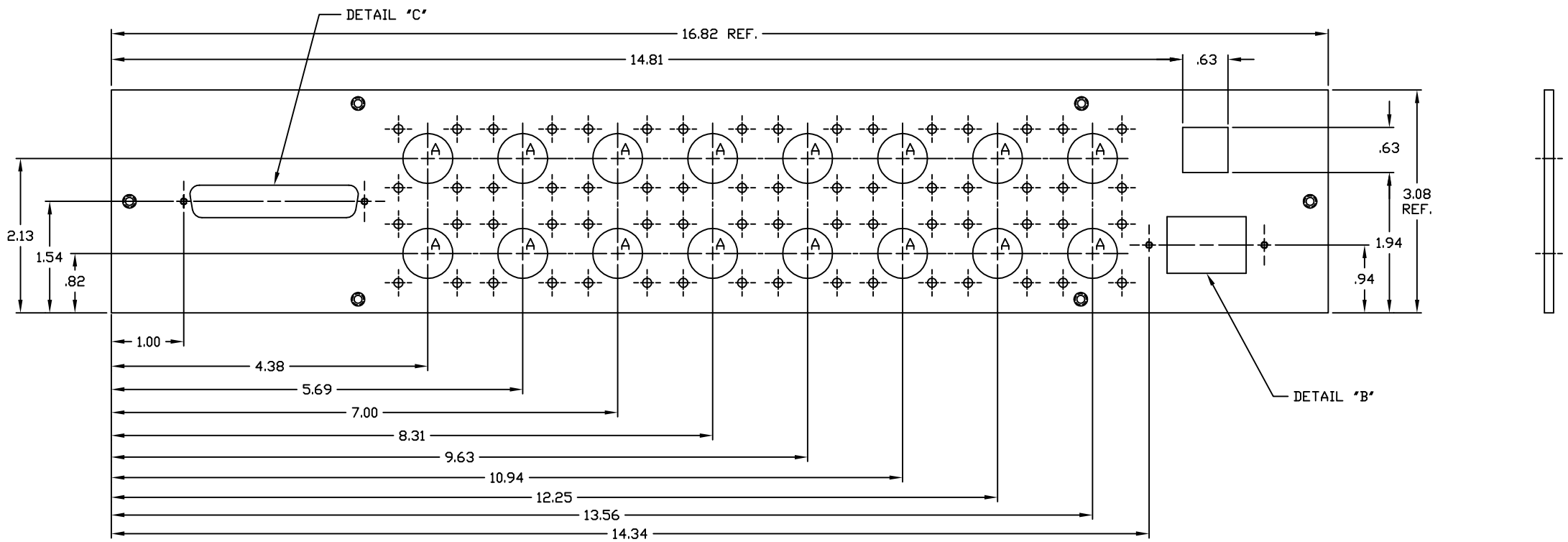

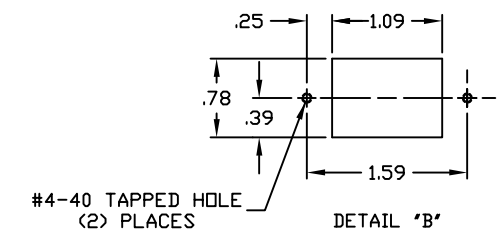

DETAIL 'B'

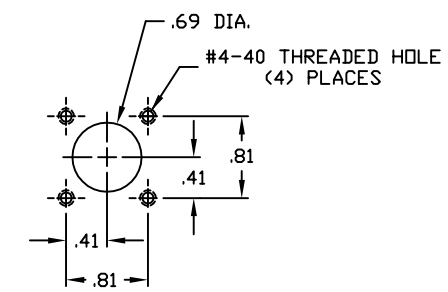

DETAIL 'A'

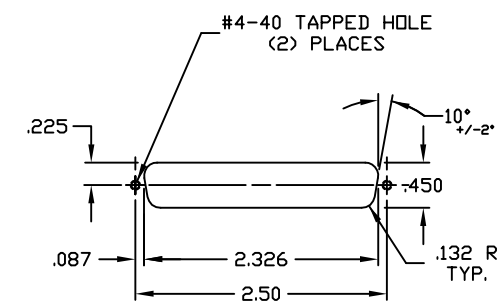

DETAIL 'C'

ORIGINATOR	W. JOHNSON	2/9/04	CHECKED		
DRAWN	N. CUNY	2/9/04	APPROVED		

FERMI NATIONAL ACCELERATOR LABORATORY
UNITED STATES DEPARTMENT OF ENERGY

PPD/ETT/ES-CDMS (E891)
CDMS P.S. INTERFACE
CHASSIS BACK PANEL

SCALE	SOFTWARE	DRAWING NUMBER	REV.
FULL	AUTOCAD	0000-MD-387423	