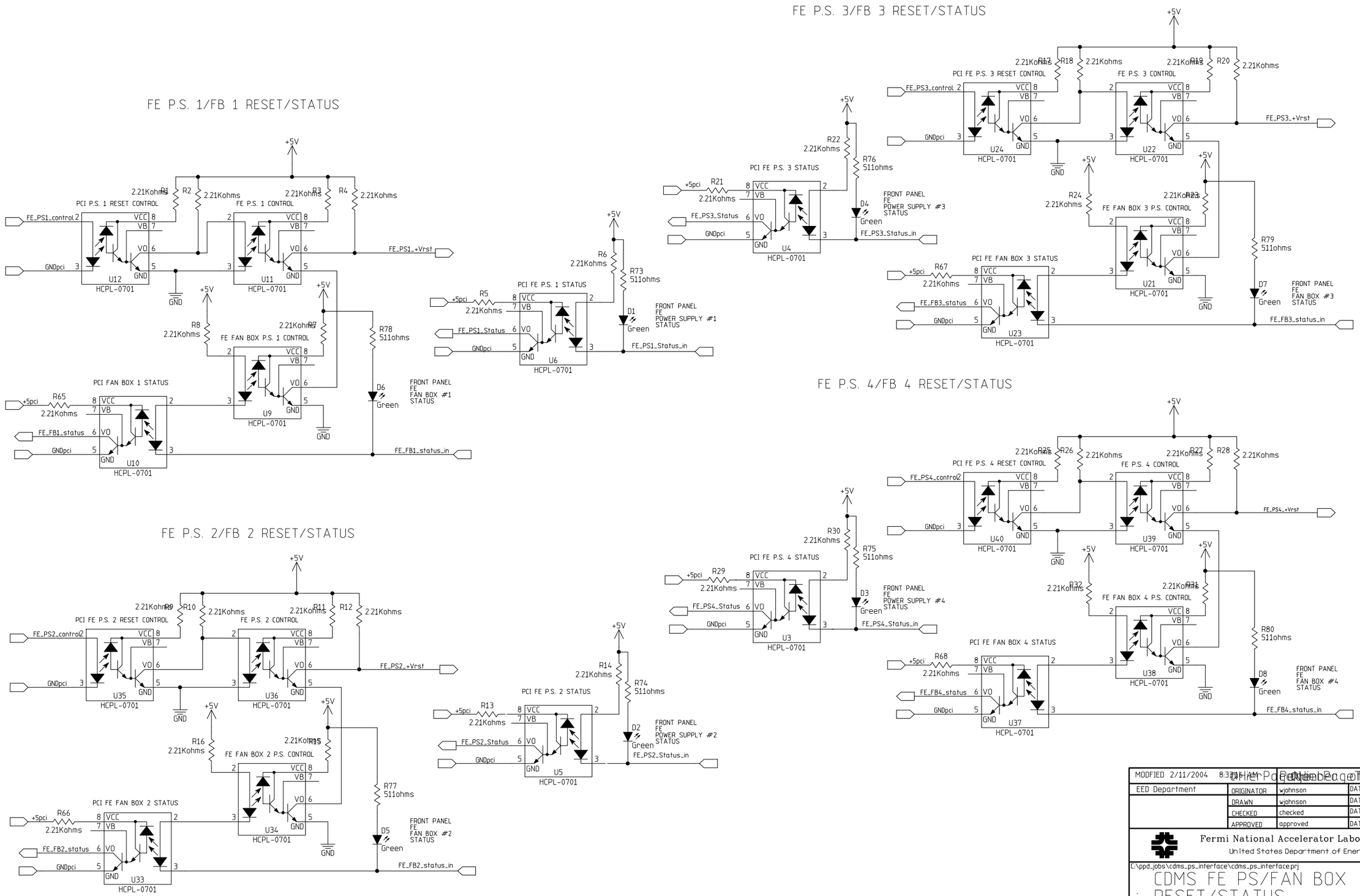
FE P.S. 1/FB 1 RESET/STATUS
FE P.S. 2/FB 2 RESET/STATUS
FE P.S. 3/FB 3 RESET/STATUS
FE P.S. 4/FB 4 RESET/STATUS
PCI P.S. 1 RESET CONTROL
FE P.S. 1 CONTROL
PCI FE P.S. 1 STATUS
PCI FAN BOX 1 STATUS
FE FAN BOX P.S. 1 CONTROL
PCI FE P.S. 2 RESET CONTROL
FE P.S. 2 CONTROL
PCI FE P.S. 2 STATUS
PCI FE FAN BOX 2 STATUS
FE FAN BOX P.S. 2 CONTROL
PCI FE P.S. 3 RESET CONTROL
FE P.S. 3 CONTROL
PCI FE P.S. 3 STATUS
PCI FE FAN BOX 3 STATUS
FE FAN BOX 3 P.S. CONTROL
PCI FE P.S. 4 RESET CONTROL
FE P.S. 4 CONTROL
PCI FE P.S. 4 STATUS
PCI FE FAN BOX 4 STATUS
FE FAN BOX 4 P.S. CONTROL
+5V
GND
HCPL-0701
FE_PS1_control
FE_PS1_+Vrst
FE_PS1_Status
FE_PS1_Status_in
FE_FB1_status
FE_FB1_status_in
FE_PS2_control
FE_PS2_+Vrst
FE_PS2_Status
FE_PS2_Status_in
FE_FB2_status
FE_FB2_status_in
FE_PS3_control
FE_PS3_+Vrst
FE_PS3_Status
FE_PS3_Status_in
FE_FB3_status
FE_FB3_status_in
FE_PS4_control
FE_PS4_+Vrst
FE_PS4_Status
FE_PS4_Status_in
FE_FB4_status
FE_FB4_status_in
FRONT PANEL FE POWER SUPPLY #1 STATUS
FRONT PANEL FE FAN BOX #1 STATUS
FRONT PANEL FE POWER SUPPLY #2 STATUS
FRONT PANEL FE FAN BOX #2 STATUS
FRONT PANEL FE POWER SUPPLY #3 STATUS
FRONT PANEL FE FAN BOX #3 STATUS
FRONT PANEL FE POWER SUPPLY #4 STATUS
FRONT PANEL FE FAN BOX #4 STATUS
Green
2.21Kohms
511ohms
MODIFIED 2/11/2004 8:31:16 AM
Other Pages Referenced
Sheet Page Total
EED Department
ORIGINATOR wjohnson DATE 2/3/2004
DRAWN wjohnson DATE 2/3/2004
CHECKED checked DATE date
APPROVED approved DATE date
Fermi National Accelerator Laboratory
United States Department of Energy
C:\ppd_jobs\cdms_ps_interface\cdms_ps_interface.prj
CDMS FE PS/FAN BOX RESET/STATUS
SIZE D
DRAWING NUMBER drawing number
Schematic Page 01 of 03
REV A
H:8ND; V:4LA

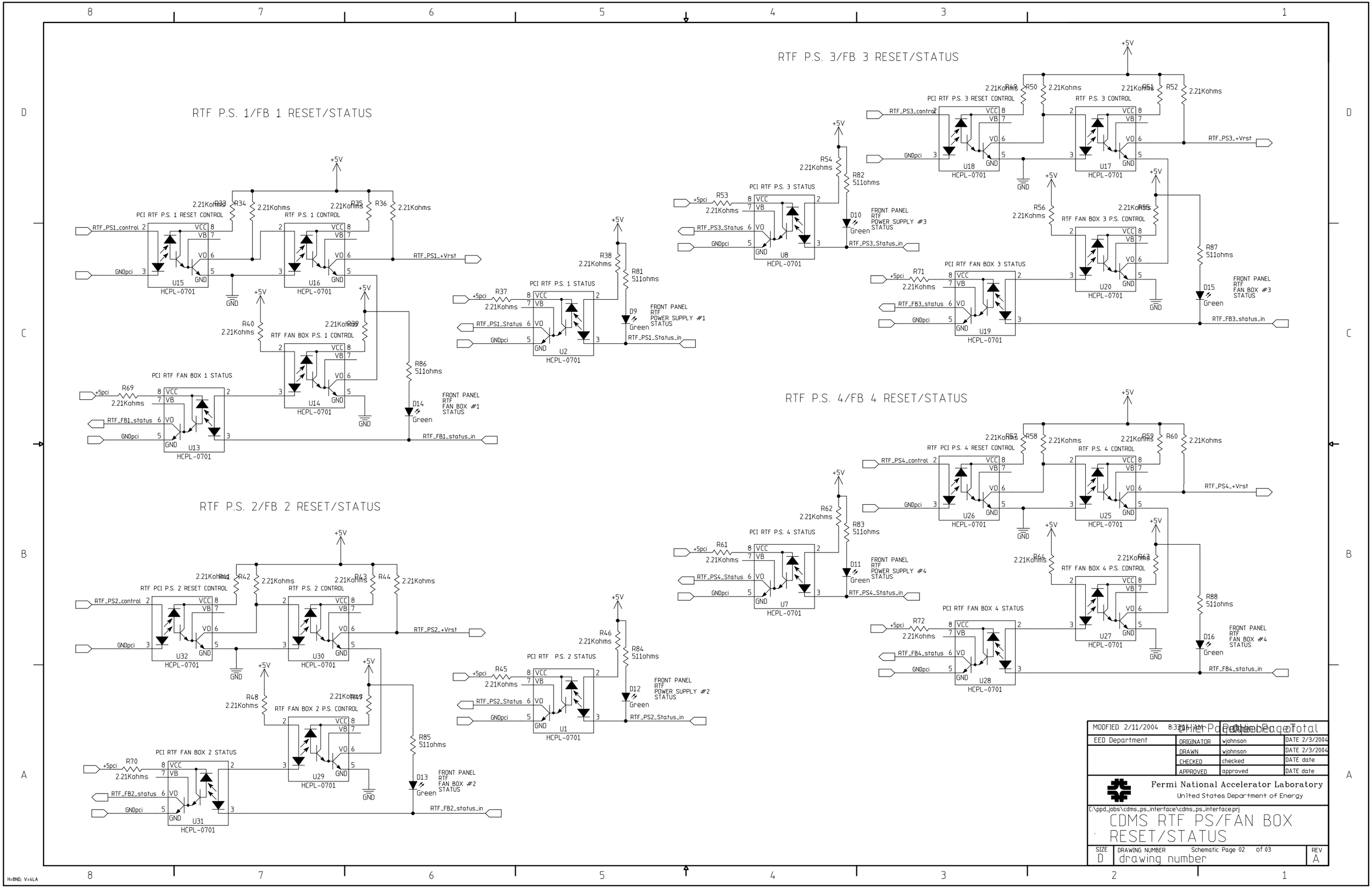
RTF P.S. 1/FB 1 RESET/STATUS
RTF P.S. 2/FB 2 RESET/STATUS
RTF P.S. 3/FB 3 RESET/STATUS
RTF P.S. 4/FB 4 RESET/STATUS
PCI RTF P.S. 1 RESET CONTROL
RTF P.S. 1 CONTROL
RTF FAN BOX P.S. 1 CONTROL
PCI RTF FAN BOX 1 STATUS
PCI RTF P.S. 1 STATUS
PCI RTF P.S. 2 RESET CONTROL
RTF P.S. 2 CONTROL
RTF FAN BOX 2 P.S. CONTROL
PCI RTF FAN BOX 2 STATUS
PCI RTF P.S. 2 STATUS
PCI RTF P.S. 3 RESET CONTROL
RTF P.S. 3 CONTROL
RTF FAN BOX 3 P.S. CONTROL
PCI RTF FAN BOX 3 STATUS
PCI RTF P.S. 3 STATUS
PCI RTF P.S. 4 RESET CONTROL
RTF P.S. 4 CONTROL
RTF FAN BOX 4 P.S. CONTROL
PCI RTF FAN BOX 4 STATUS
PCI RTF P.S. 4 STATUS
FRONT PANEL RTF POWER SUPPLY #1 STATUS
FRONT PANEL RTF POWER SUPPLY #2 STATUS
FRONT PANEL RTF POWER SUPPLY #3 STATUS
FRONT PANEL RTF POWER SUPPLY #4 STATUS
FRONT PANEL RTF FAN BOX #1 STATUS
FRONT PANEL RTF FAN BOX #2 STATUS
FRONT PANEL RTF FAN BOX #3 STATUS
FRONT PANEL RTF FAN BOX #4 STATUS
HCPL-0701
MODIFIED 2/11/2004 8:33:16 AM
EED Department
ORIGINATOR wjohnson DATE 2/3/2004
DRAWN wjohnson DATE 2/3/2004
CHECKED checked DATE date
APPROVED approved DATE date
Fermi National Accelerator Laboratory
United States Department of Energy
C:\ppd_jobs\cdms_ps_interface\cdms_ps_interface.prj
CDMS RTF PS/FAN BOX RESET/STATUS
SIZE D
DRAWING NUMBER drawing number
Schematic Page 02 of 03
REV A
H=8ND; V=4LA

PCI CONTROL/STATUS CONNECTOR
CHASSIS CONNECTOR J1

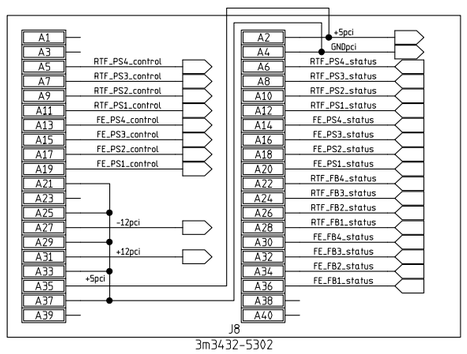

POWER SUPPLY
RESET/STATUS CONNECTORS
CHASSIS CONNECTORS J2, 3, 6, 7, 10, 11, 14, 15

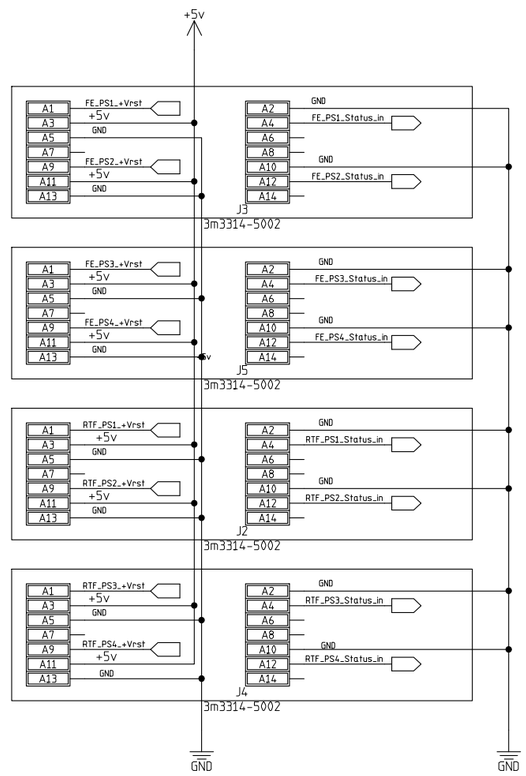

FAN BOX STATUS CONNECTORS
CHASSIS CONNECTORS J4, 5, 8, 9, 12, 13, 16, 17

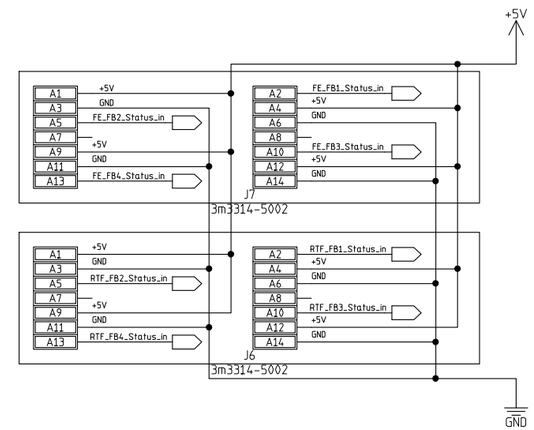

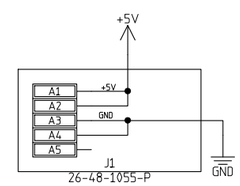

MODFIED 2/11/2004 8:37:16 AM	Other Pages: Page 2 of 3	Total Pages: 3	
EED Department	ORIGINATOR	wjohnson	DATE 2/3/2004
	DRAWN	wjohnson	DATE 2/3/2004
	CHECKED	checked	DATE date
	APPROVED	approved	DATE date

Fermi National Accelerator Laboratory
United States Department of Energy

C:\ppd_jobs\cdms_ps_interface\cdms_ps_interface.prj

CDMS PS INTERFACE MODULE CONNECTORS

SIZE	DRAWING NUMBER	REV
D	drawing number (Schematic Page 03 of 03)	A

H=8ND; V=4LA