REV.	DESCRIPTION	DRAWN	DATE
		APPROVED	DATE
A	ADDED C'SINK TO THREADED HOLES ON TOP OF RAILS	N.CADENA	8/18/99
		C.NILA	8/18/99
B	REMOVED HOLES ON TOP OF RAILS ADDED HOLES TO SIDE OF RAILS	N.CADENA	8/24/99
		J.FOGLESONG	8/25/99

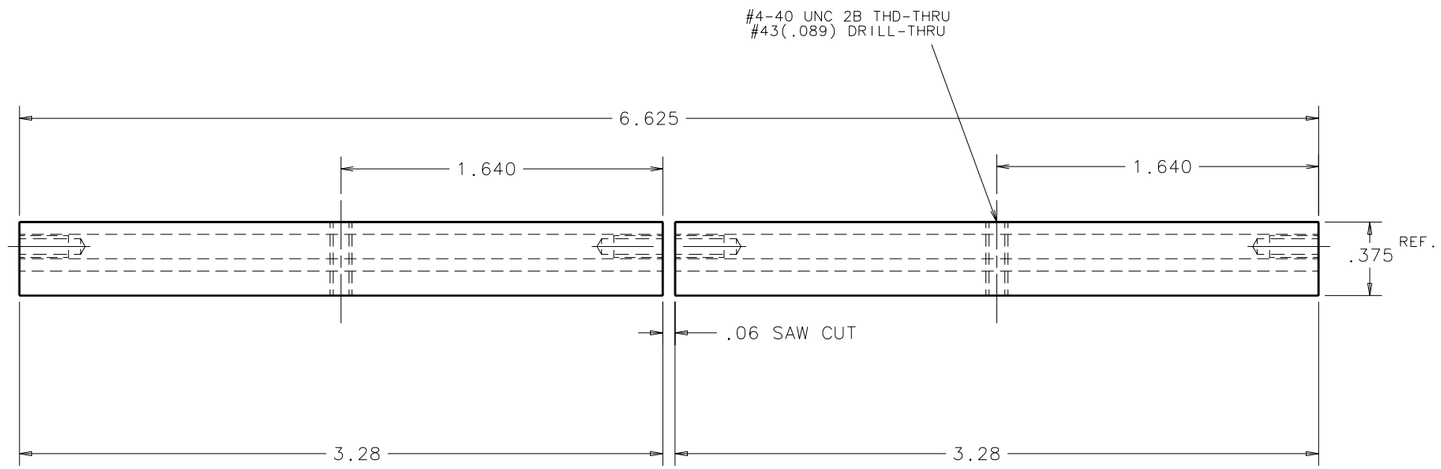

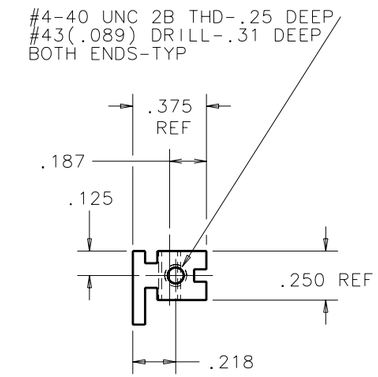

NOTE:

1. ONE(1) MODIFIED GUIDE RAIL MAKES TWO(2) PIECES OF THIS DRAWING NUMBER.

ITEM NO.	PART NO.	DESCRIPTION OR SIZE	QTY. REQ.
PARTS LIST			

UNLESS OTHERWISE SPECIFIED			ORIGINATOR	J.FOGELSONG	3/99
.XX	.XXX	ANGLES	DRAWN	N.CADENA	3/99
± .02	± .005	± ——	CHECKED	C.NILA	4/26/99
			APPROVED	J.FOGLESONG	4/28/99

1. BREAK ALL SHARP EDGES .015 MAX.
2. DO NOT SCALE DRWG.
3. DIMENSIONING IN ACCORD WITH ANSI Y14.5M-1982 STD'S.
4. ALL DIMENSIONS ARE IN INCHES.

125 √ MAX. ALL MACHINED SURFACES

USED ON: MD-372682

MATERIAL: ALUMINUM CHASSIS CARD GUIDE RAIL(FURNISHED)

FERMI NATIONAL ACCELERATOR LABORATORY
UNITED STATES DEPARTMENT OF ENERGY

RD/MECHANICAL SUPPORT DEPT.
D-ZERO STANDARD HI-VOLTAGE FAN OUT BOX RAIL

SCALE	DRAWING NUMBER	SHEET NO.	REV.
2:1	3823.133-MC-372675	1 OF 1	B

Plotted by cadena on 04-Mar-02 , File: 372675-01c.pff