REV.	DESCRIPTION	DRAWN	DATE
		APPROVED	DATE

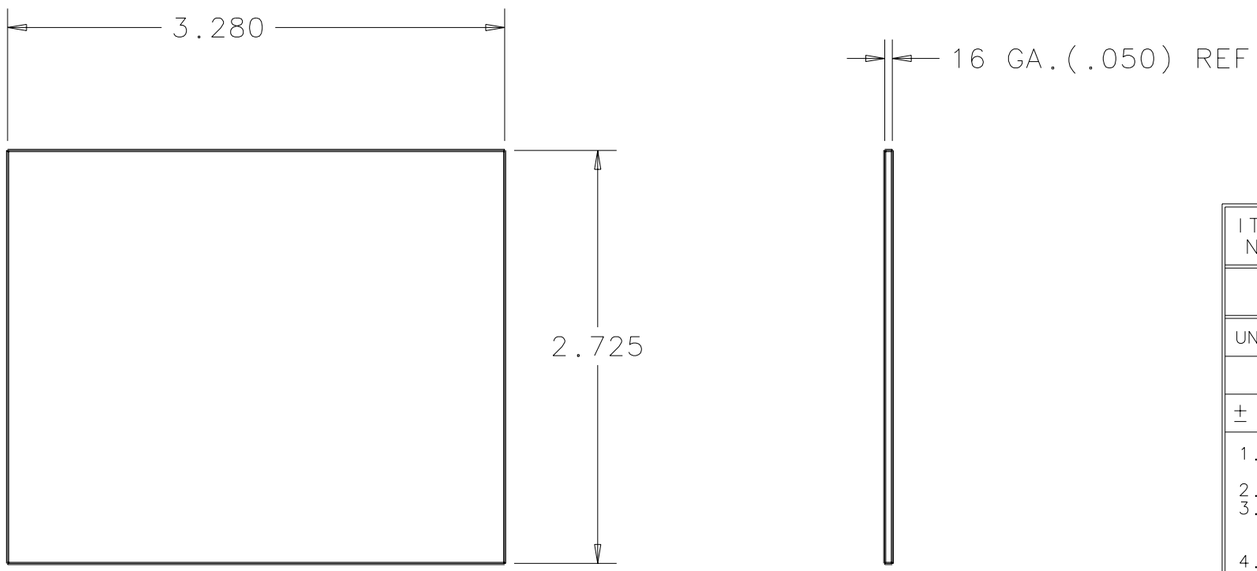

ITEM NO.	PART NO.	DESCRIPTION OR SIZE	QTY. REQ.

PARTS LIST

UNLESS OTHERWISE SPECIFIED			ORIGINATOR	J.FOGELSONG	3/99
.XX	.XXX	ANGLES	DRAWN	N.CADENA	3/99
± ——	± .005	± ——	CHECKED	C.NILA	3/7/01
			APPROVED	J.FOGELSONG	3/7/01

1. BREAK ALL SHARP EDGES .015 MAX.
2. DO NOT SCALE DRWG.
3. DIMENSIONING IN ACCORD WITH ANSI Y14.5M-1982 STD'S.
4. ALL DIMENSIONS ARE IN INCHES.

125 √ MAX. ALL MACHINED SURFACES

USED ON
MD-372682

MATERIAL
16 GA.(.050)THK.
ALUMINUM 6061-T6 SHEET

FERMI NATIONAL ACCELERATOR LABORATORY
UNITED STATES DEPARTMENT OF ENERGY

RD/MECHANICAL SUPPORT DEPT.
D-ZERO FAN OUT BOX
SIDE PANEL

SCALE	DRAWING NUMBER	SHEET NO.	REV.
FULL	3823.133-MB-372673	1 OF 1	

Plotted by cadena on 04-Mar-02 , File: 372673-01a.pff