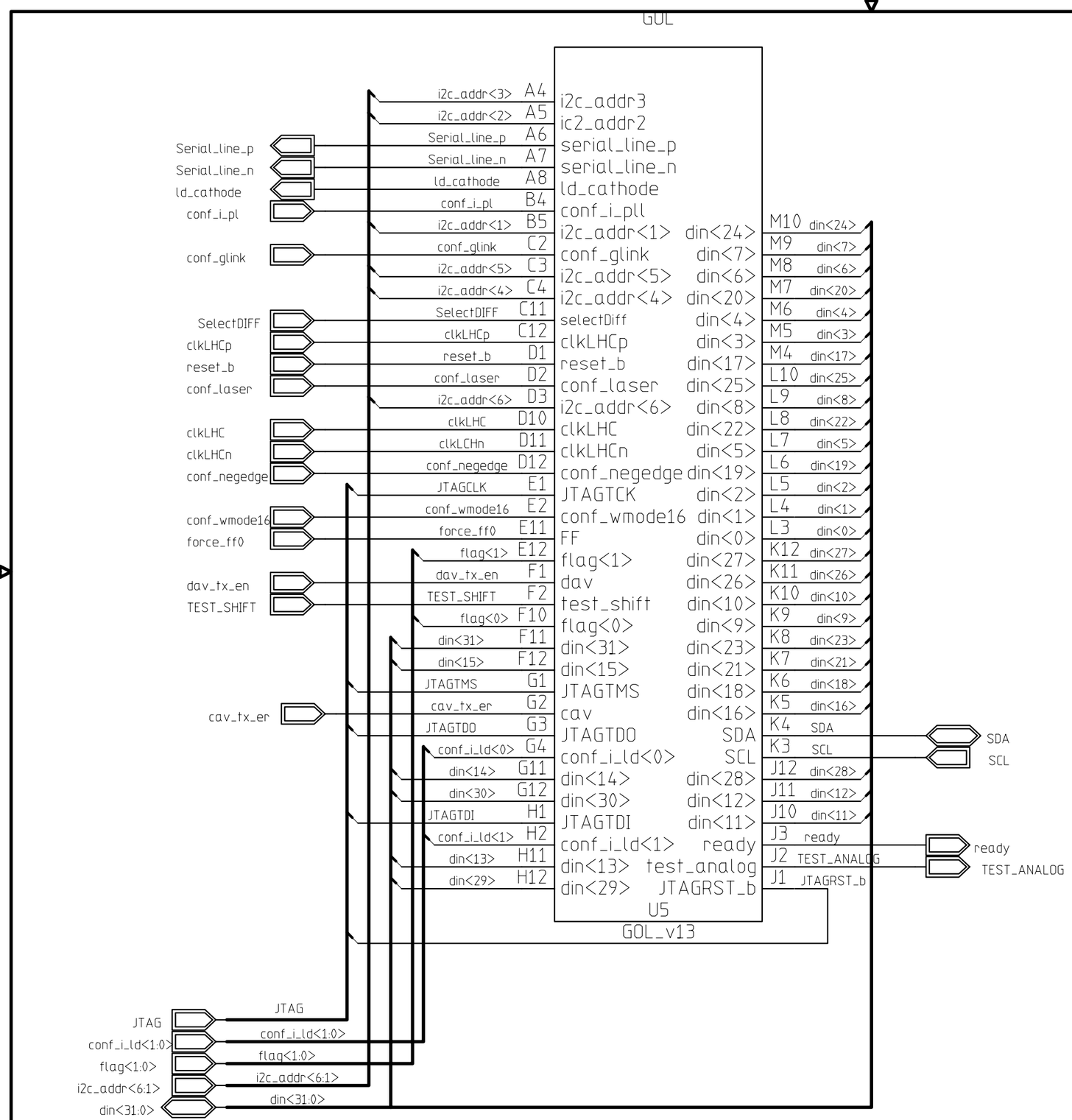

MODFIED 04/24/2003 12:10:37 PM		Hierarchical_Page of9 10	
EED Department	ORIGINATOR	Marcus Larwill	DATE 12/18/02
	DRAWN	Marcus Larwill	DATE 12/18/02
	CHECKED	checked	DATE date
	APPROVED	approved	DATE date

Fermi National Accelerator Laboratory
United States Department of Energy

F:\Project\CMS\gol_testcard\GOL_Chip_Tester\GOL_Chip_Tester.prj

SIZE	DRAWING NUMBER		REV
B	172287	Schematic Page 01 of 01	A

H=2LA; V=2LA