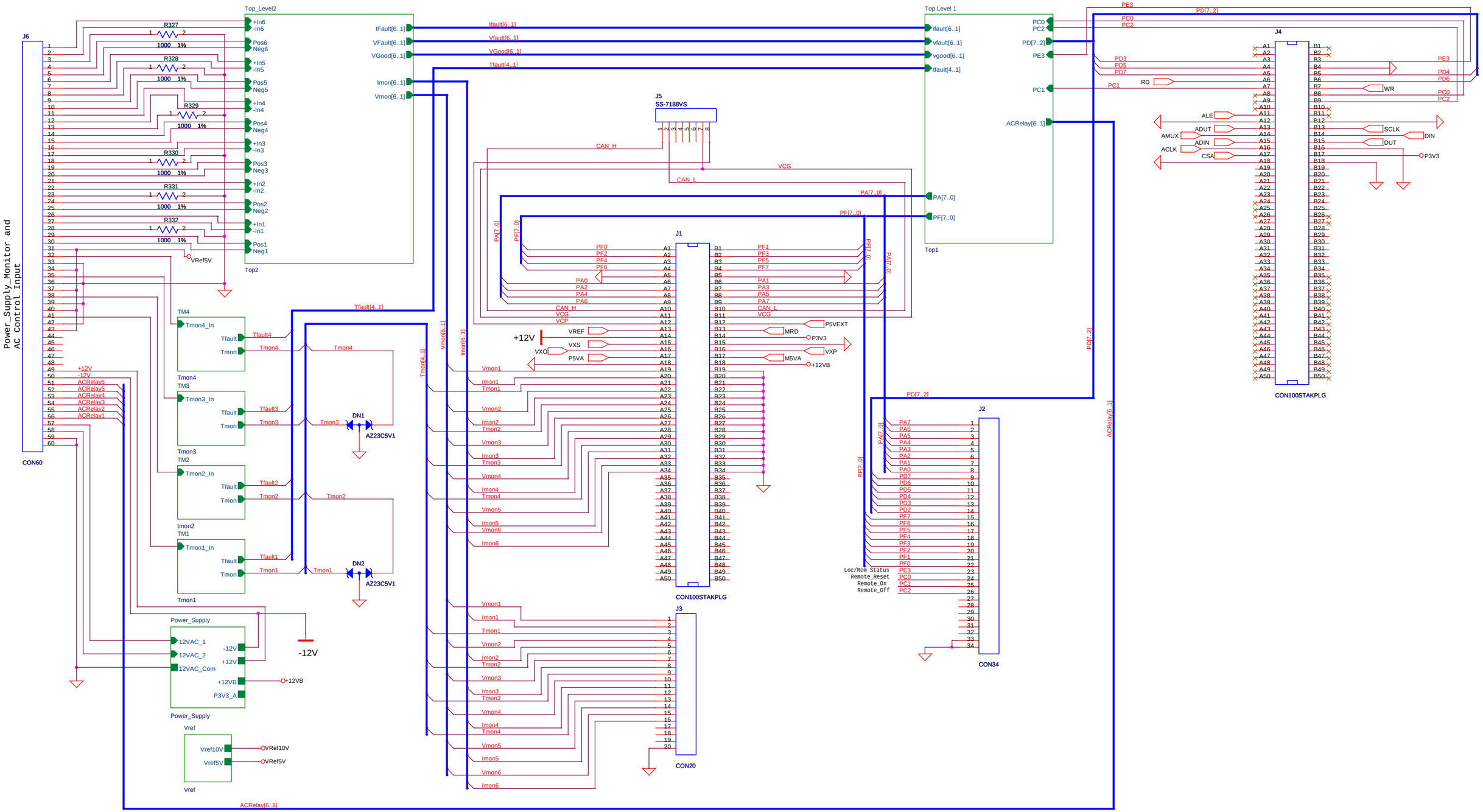
Power_Supply_Monitor and
AC Control Input
J6
CON60
Top_Level2
Top2
Top Level 1
Top1
J5
SS-7188VS
J1
CON100STAKPLG
J2
CON34
J3
CON20
J4
CON100STAKPLG
TM4
TM3
TM2
TM1
Power_Supply
Vref
DN1
DN2
AZ23C5V1
+12V
-12V
+12V
-12V
+12VB
VRef5V
VRef10V
ACRelay[6..1]