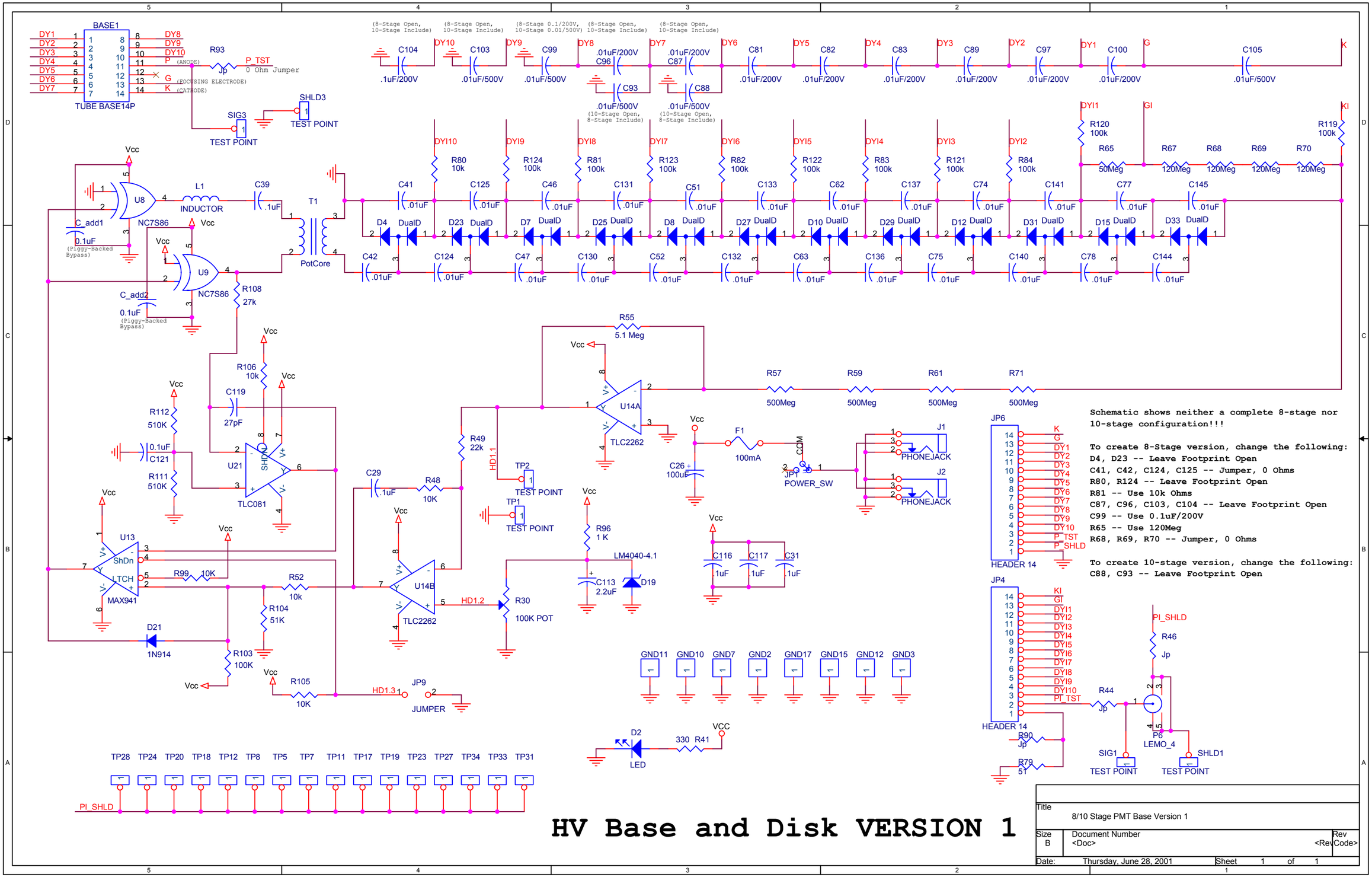
BASE1
TUBE BASE14P
DY1
DY2
DY3
DY4
DY5
DY6
DY7
DY8
DY9
DY10
P (ANODE)
G (FOCUSING ELECTRODE)
K (CATHODE)
R93
Jp
P_TST
0 Ohm Jumper
SIG3
TEST POINT
SHLD3
TEST POINT
(8-Stage Open, 10-Stage Include)
(8-Stage Open, 10-Stage Include)
(8-Stage 0.1/200V, 10-Stage 0.01/500V)
(8-Stage Open, 10-Stage Include)
(8-Stage Open, 10-Stage Include)
C104 .1uF/200V
C103 .01uF/500V
C99 .01uF/500V
C96 .01uF/200V
C93 .01uF/500V
(10-Stage Open, 8-Stage Include)
C87 .01uF/200V
C88 .01uF/500V
(10-Stage Open, 8-Stage Include)
C81 .01uF/200V
C82 .01uF/200V
C83 .01uF/200V
C89 .01uF/200V
C97 .01uF/200V
C100 .01uF/200V
C105 .01uF/500V
G
K
DYI1
GI
KI
R120 100k
R119 100k
R65 50Meg
R67 120Meg
R68 120Meg
R69 120Meg
R70 120Meg
DYI10
DYI9
DYI8
DYI7
DYI6
DYI5
DYI4
DYI3
DYI2
R80 10k
R124 100k
R81 100k
R123 100k
R82 100k
R122 100k
R83 100k
R121 100k
R84 100k
C41 .01uF
C125 .01uF
C46 .01uF
C131 .01uF
C51 .01uF
C133 .01uF
C62 .01uF
C137 .01uF
C74 .01uF
C141 .01uF
C77 .01uF
C145 .01uF
D4 DualD
D23 DualD
D7 DualD
D25 DualD
D8 DualD
D27 DualD
D10 DualD
D29 DualD
D12 DualD
D31 DualD
D15 DualD
D33 DualD
C42 .01uF
C124 .01uF
C47 .01uF
C130 .01uF
C52 .01uF
C132 .01uF
C63 .01uF
C136 .01uF
C75 .01uF
C140 .01uF
C78 .01uF
C144 .01uF
Vcc
U8
NC7S86
L1
INDUCTOR
C39 .1uF
T1
PotCore
C_add1 0.1uF (Piggy-Backed Bypass)
U9
NC7S86
C_add2 0.1uF (Piggy-Backed Bypass)
R108 27k
R55 5.1 Meg
U14A
TLC2262
R57 500Meg
R59 500Meg
R61 500Meg
R71 500Meg
R106 10k
C119 27pF
R112 510K
C121 0.1uF
R111 510K
U21
TLC081
SHDN
R49 22k
HD1.1
TP2
TEST POINT
TP1
TEST POINT
C29 .1uF
R48 10K
U14B
TLC2262
HD1.2
R30 100K POT
R96 1 K
LM4040-4.1
C113 2.2uF
D19
C26 100uF
F1 100mA
COM
JP1
POWER_SW
J1
PHONEJACK
J2
PHONEJACK
C116 .1uF
C117 .1uF
C31 .1uF
U13
MAX941
ShDn
LTCH
R99 10K
R52 10k
R104 51K
D21
1N914
R103 100K
R105 10K
HD1.3
JP9
JUMPER
GND11
GND10
GND7
GND2
GND17
GND15
GND12
GND3
D2
LED
330 R41
VCC
TP28
TP24
TP20
TP18
TP12
TP8
TP5
TP7
TP11
TP17
TP19
TP23
TP27
TP34
TP33
TP31
PI_SHLD
JP6
HEADER 14
JP4
HEADER 14
PI_SHLD
R46
Jp
R44
Jp
P6
LEMO_4
SIG1
TEST POINT
SHLD1
TEST POINT
R90
Jp
R79
51
Schematic shows neither a complete 8-stage nor 10-stage configuration!!!
To create 8-Stage version, change the following:
D4, D23 -- Leave Footprint Open
C41, C42, C124, C125 -- Jumper, 0 Ohms
R80, R124 -- Leave Footprint Open
R81 -- Use 10k Ohms
C87, C96, C103, C104 -- Leave Footprint Open
C99 -- Use 0.1uF/200V
R65 -- Use 120Meg
R68, R69, R70 -- Jumper, 0 Ohms
To create 10-stage version, change the following:
C88, C93 -- Leave Footprint Open
HV Base and Disk VERSION 1
Title
8/10 Stage PMT Base Version 1
Size B
Document Number
<Doc>
Rev
<Rev Code>
Date: Thursday, June 28, 2001
Sheet 1 of 1