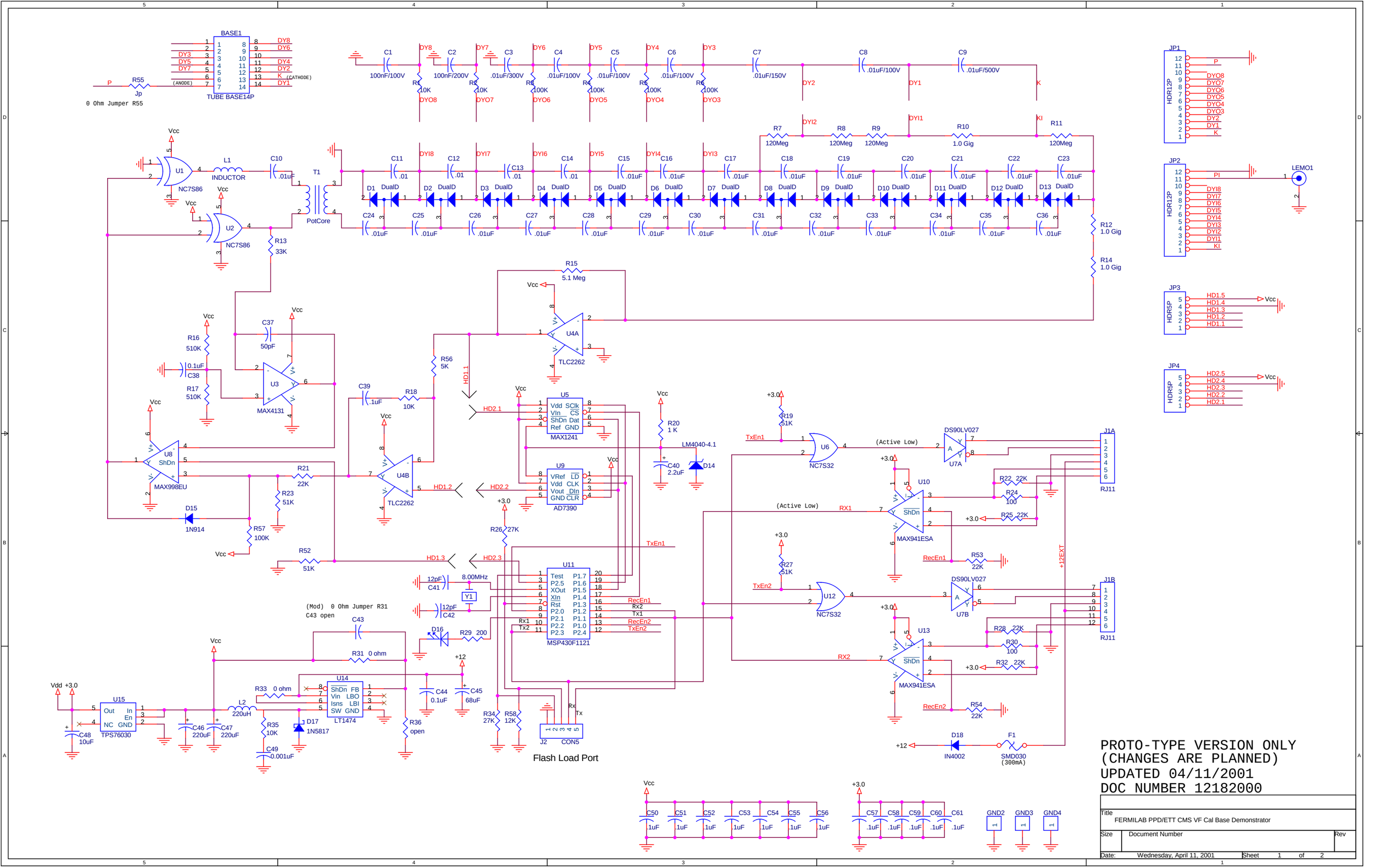

PROTO-TYPE VERSION ONLY
(CHANGES ARE PLANNED)
UPDATED 04/11/2001
DOC NUMBER 12182000

Title	FERMILAB PPD/ETT CMS VF Cal Base Demonstrator
Size	Document Number
Rev	
Date:	Wednesday, April 11, 2001
Sheet	1 of 2

This document was created with Win2PDF available at http://www.daneprairie.com.
The unregistered version of Win2PDF is for evaluation or non-commercial use only.