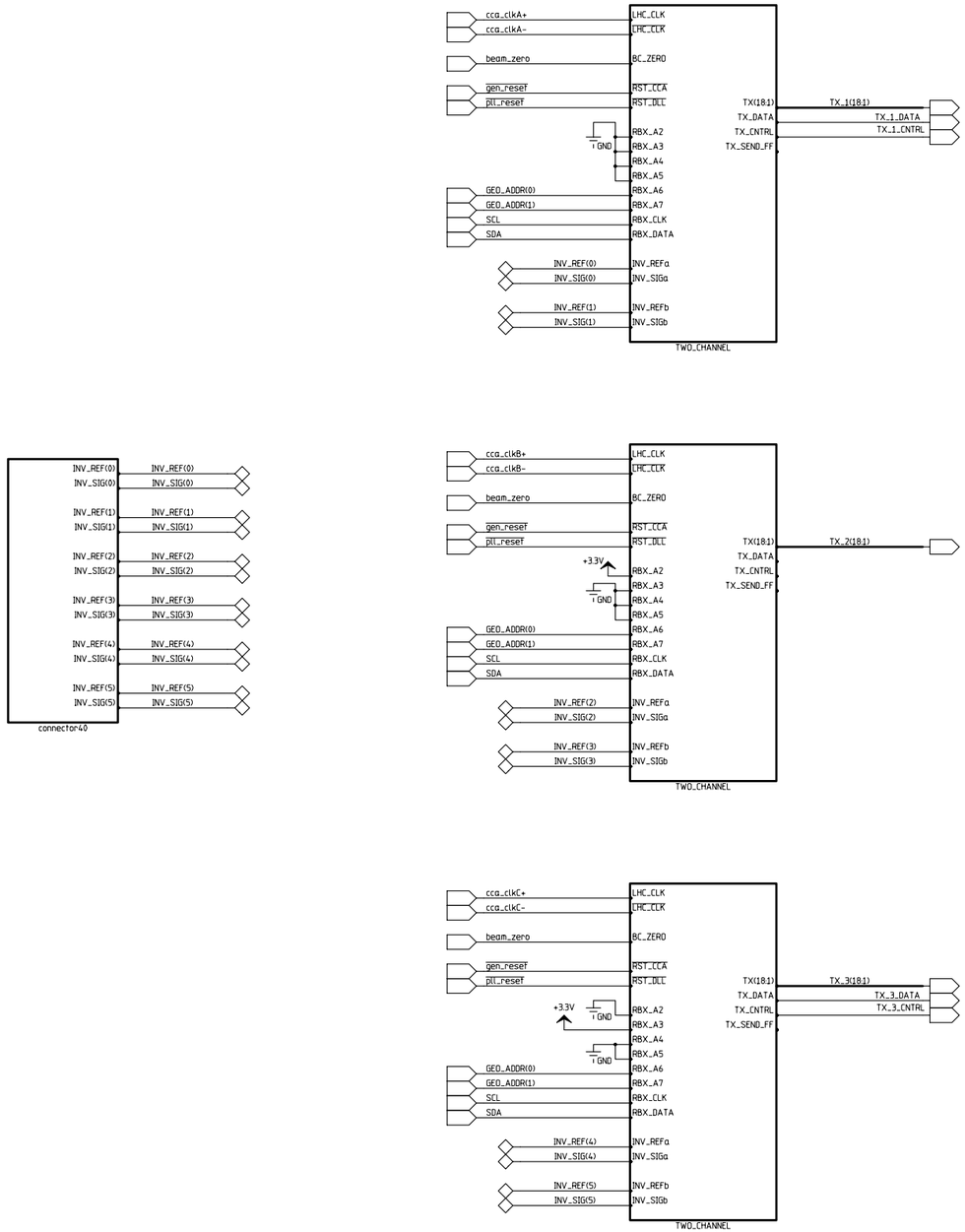

MODFIED 05:39:54 PM 02/11/2002				
UNLESS OTHERWISE SPECIFIED			ORIGINATOR	
FRACTIONS	DECIMALS	ANGLES	DRAWN	
			CHECKED	
			APPROVED	

1. BREAK ALL SHARP EDGES 1/64 MAX.
2. DO NOT SCALE DWG.
3. DIMENSIONING IN ACCORD. WITH ANSI Y14.5 STD's.

√ MAX. ALL MACHINED SURFACES

USED ON

MATERIAL

Fermi National Accelerator Laboratory
United States Department of Energy

C:\FEE\PreProd_QIE_HPD\PreProd_QIE_HPD.prj

SIZE	SCALE	FILMED	DRAWING NUMBER	PAGE 01	of 04	REV
D	1:1					A

H=BND; V=4LA

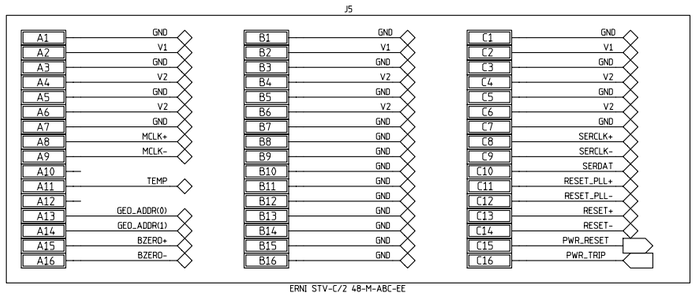

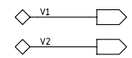

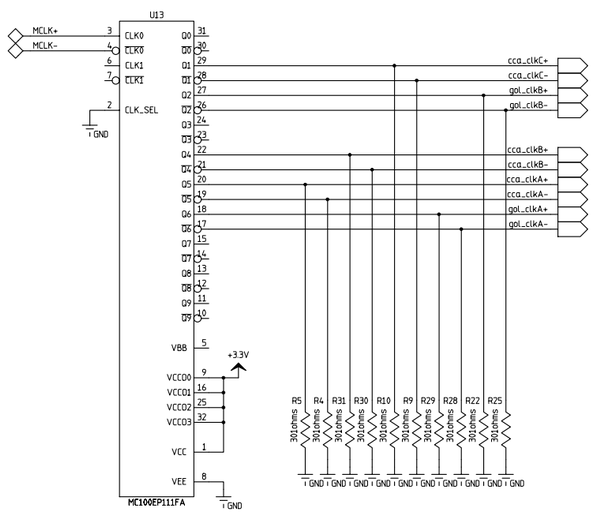

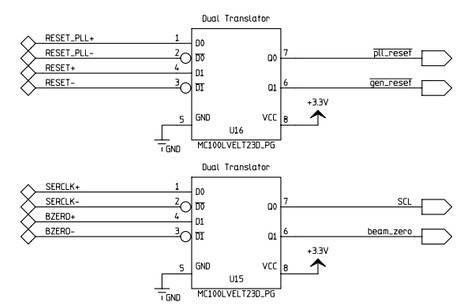

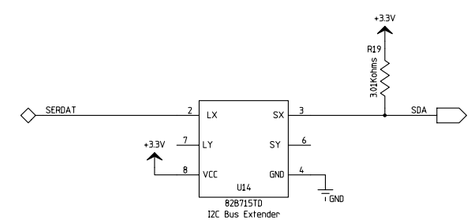

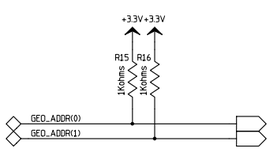

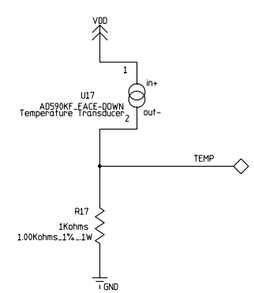

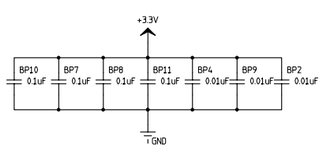

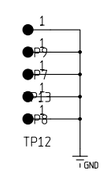

MODFIED 08:13:39 AM 10/18/2002

UNLESS OTHERWISE SPECIFIED			ORIGINATOR		
FRACTIONS	DECIMALS	ANGLES	DRAWN		
			CHECKED		
			APPROVED		

1. BREAK ALL SHARP EDGES 1/64 MAX.
2. DO NOT SCALE DWG.
3. DIMENSIONING IN ACCORD WITH ANSI Y14.5 STD's.

MAX. ALL MACHINED SURFACES

USED ON

MATERIAL

Fermi National Accelerator Laboratory
United States Department of Energy

C:\FEE\PreProd_QIE_HPD\PreProd_QIE_HPD.prj

SIZE	SCALE	FILMED	DRAWING NUMBER	PAGE 02 of 04	REV
D	1:1				A

H=8ND, V=4LA

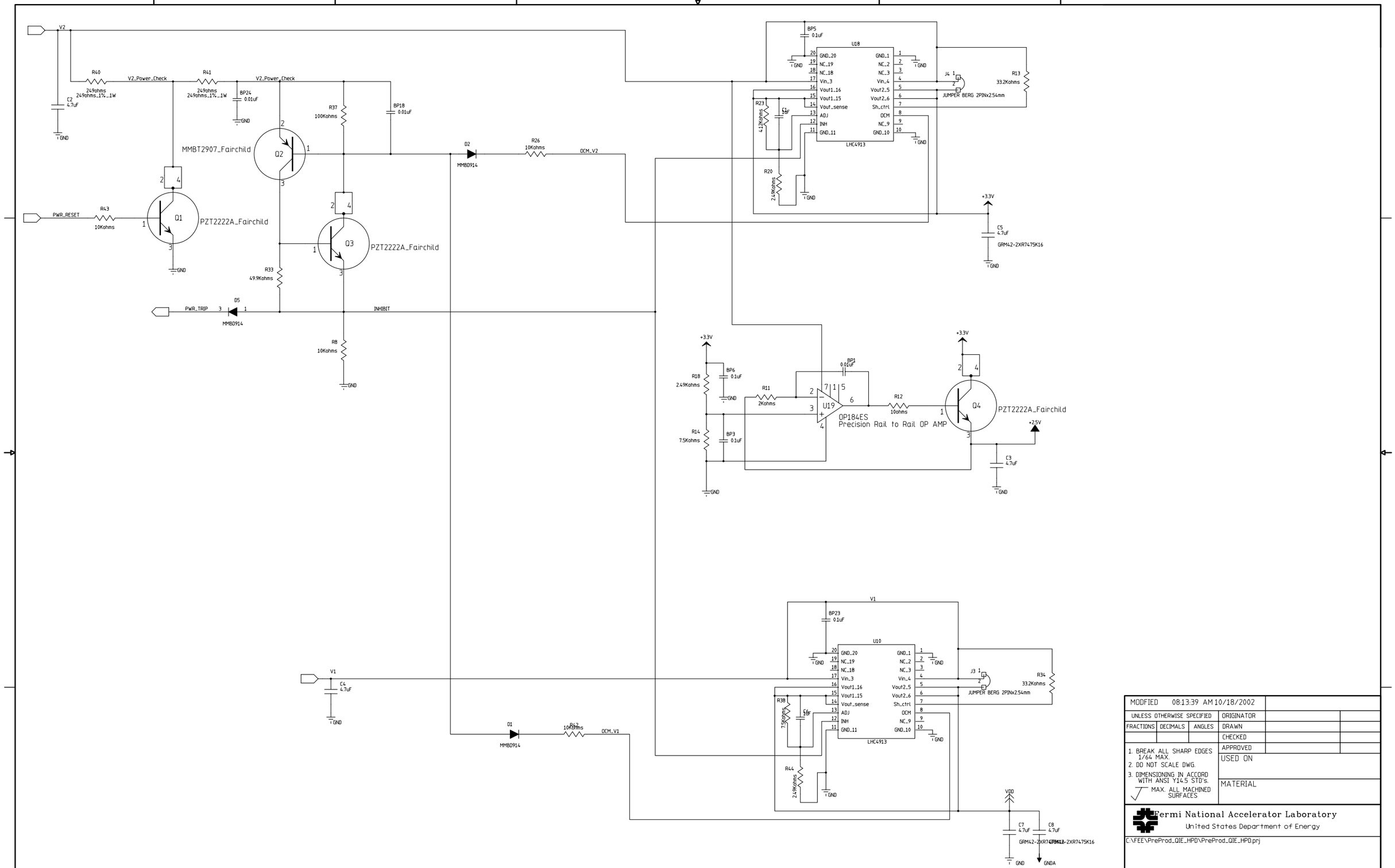

MODFIED 08:13:39 AM 10/18/2002				
UNLESS OTHERWISE SPECIFIED			ORIGINATOR	
FRACTIONS	DECIMALS	ANGLES	DRAWN	
			CHECKED	
			APPROVED	

1. BREAK ALL SHARP EDGES 1/64 MAX.
2. DO NOT SCALE DWG.
3. DIMENSIONING IN ACCORD WITH ANSI Y14.5 STD's.

√ MAX. ALL MACHINED SURFACES

USED ON

MATERIAL

Fermi National Accelerator Laboratory
United States Department of Energy

C:\FEE\PreProd_QIE_HPD\PreProd_QIE_HPD.prj

SIZE	SCALE	FILMED	DRAWING NUMBER	PAGE 03 of 04	REV
D	1:1				A

H=BND. V=4LA

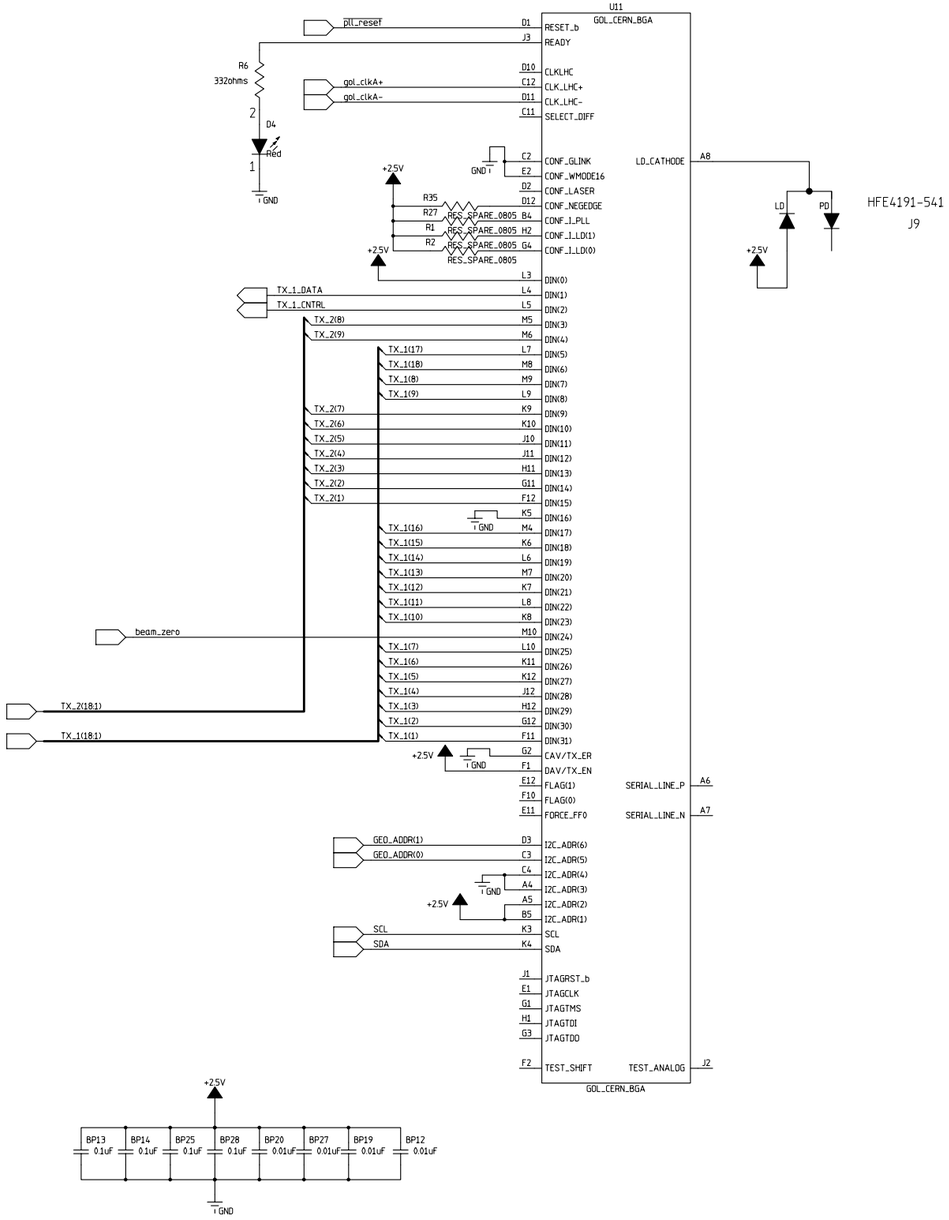

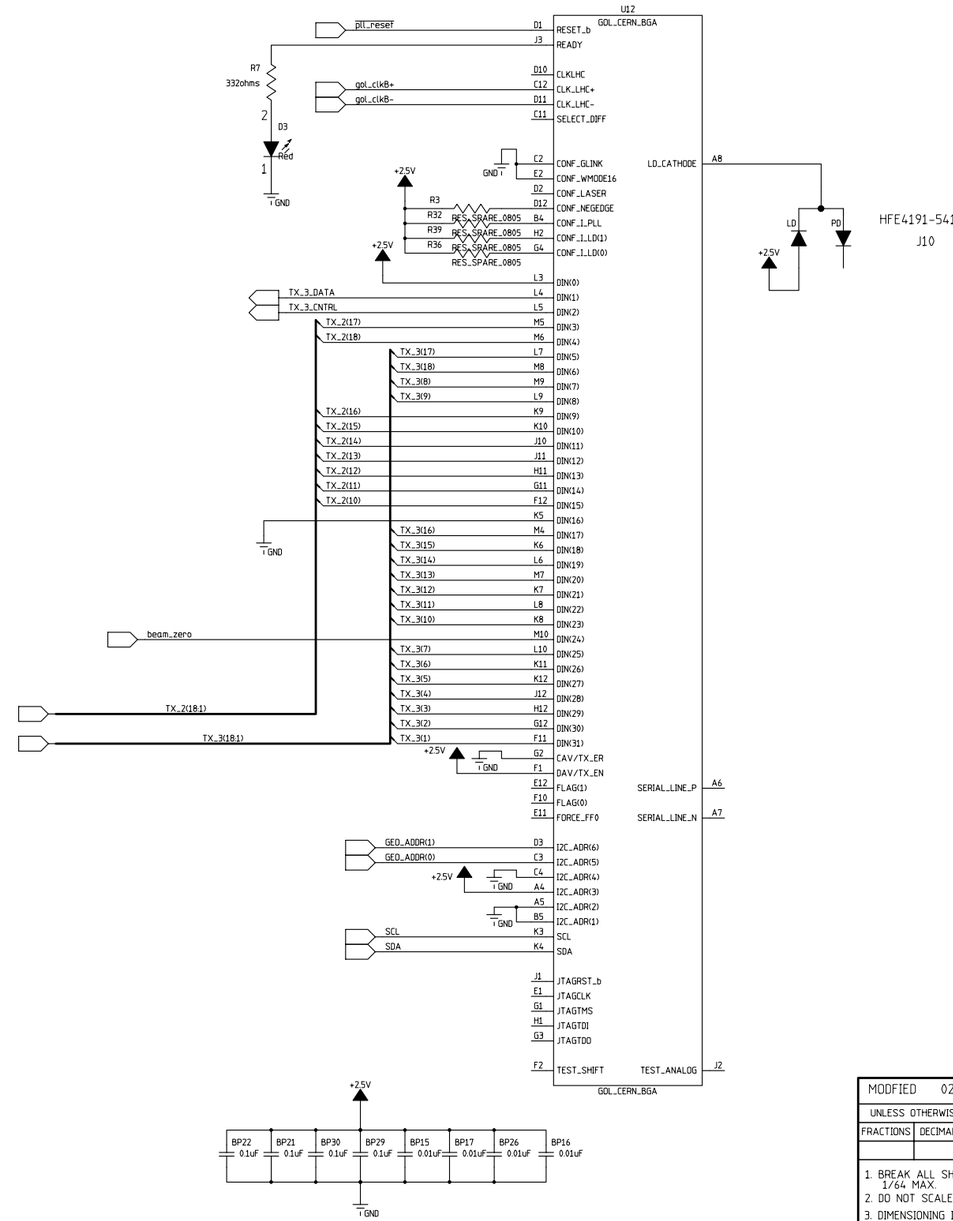

MODFIED 02:46:12 PM 10/22/2002				
UNLESS OTHERWISE SPECIFIED			ORIGINATOR	
FRACTIONS	DECIMALS	ANGLES	DRAWN	
			CHECKED	
1. BREAK ALL SHARP EDGES 1/64 MAX.			APPROVED	
2. DO NOT SCALE DWG.			USED ON	
3. DIMENSIONING IN ACCORD WITH ANSI Y14.5 STD's.			MATERIAL	
MAX. ALL MACHINED SURFACES				

Fermi National Accelerator Laboratory
United States Department of Energy

C:\FEE\PreProd_QIE_HPD\PreProd_QIE_HPD.prj

SIZE	SCALE	FILMED	DRAWING NUMBER	PAGE 04 of 04	REV
D	1:1				A

H=BND; V=4LA

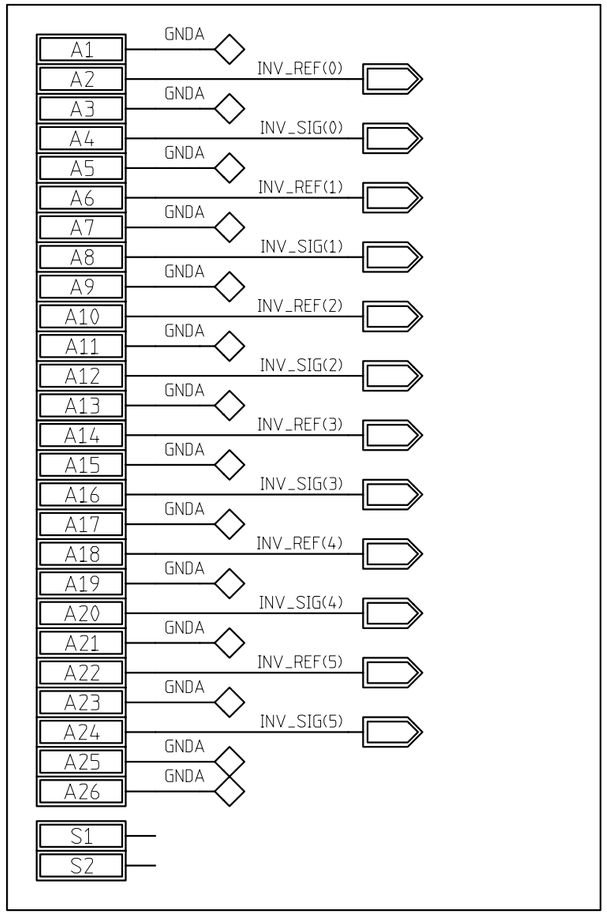

J2
OMRON XF2H-2615-1

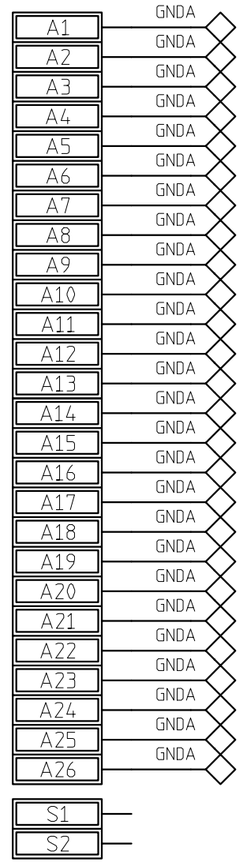

J8
OMRON XF2H-2615-1

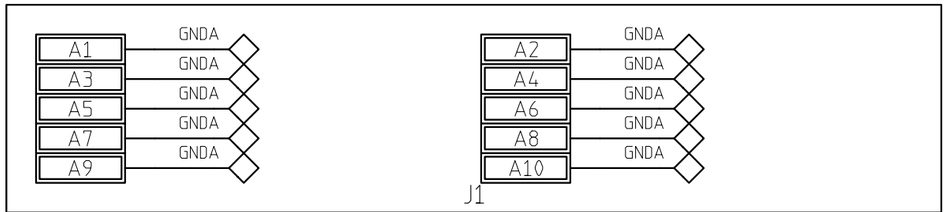

3m 151210-7422-TB

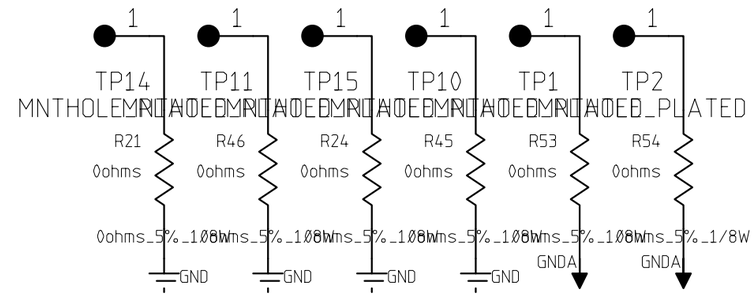

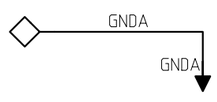

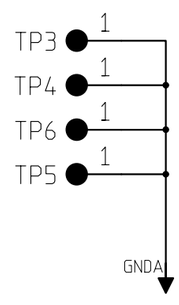

MODFIED 01:32:39 PM 10/17/2002					
UNLESS OTHERWISE SPECIFIED			ORIGINATOR		
FRACTIONS	DECIMALS	ANGLES	DRAWN		
			CHECKED		
1. BREAK ALL SHARP EDGES 1/64 MAX. 2. DO NOT SCALE DWG. 3. DIMENSIONING IN ACCORD WITH ANSI Y14.5 STD's. √ MAX. ALL MACHINED SURFACES			APPROVED		
			USED ON		
			MATERIAL		

Fermi National Accelerator Laboratory
United States Department of Energy

C:\FEE\PreProd_QIE_HPD\PreProd_QIE_HPD.prj

SIZE	SCALE	FILMED	DRAWING NUMBER	PAGE 01 of 01	REV
B	1:1				

H=2LA; V=2LA

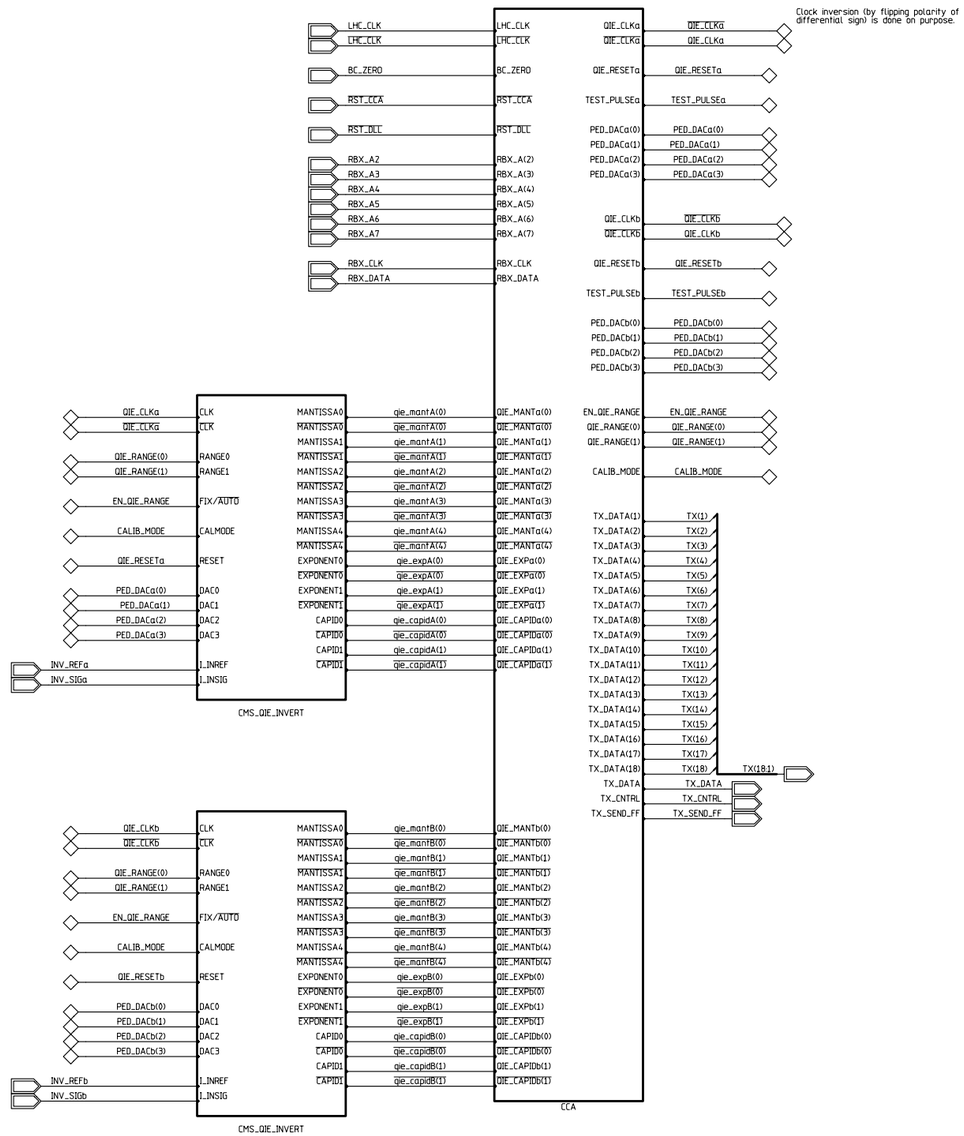

MODFIED 01:17:29 PM 09/04/2002			
UNLESS OTHERWISE SPECIFIED		ORIGINATOR	
FRACTIONS	DECIMALS	ANGLES	DRAWN
			CHECKED
			APPROVED

1. BREAK ALL SHARP EDGES 1/64 MAX.
2. DO NOT SCALE DWG.
3. DIMENSIONING IN ACCORD WITH ANSI Y14.5 STD'S.

MAX. ALL MACHINED SURFACES

USED ON

MATERIAL

Fermi National Accelerator Laboratory
United States Department of Energy

C:\FEE\PreProd_QIE_HPD\PreProd_QIE_HPD.prj

SIZE	SCALE	FILMED	DRAWING NUMBER	PAGE 01 of 01	REV
D	1:1				A

H=BND; V=4LA

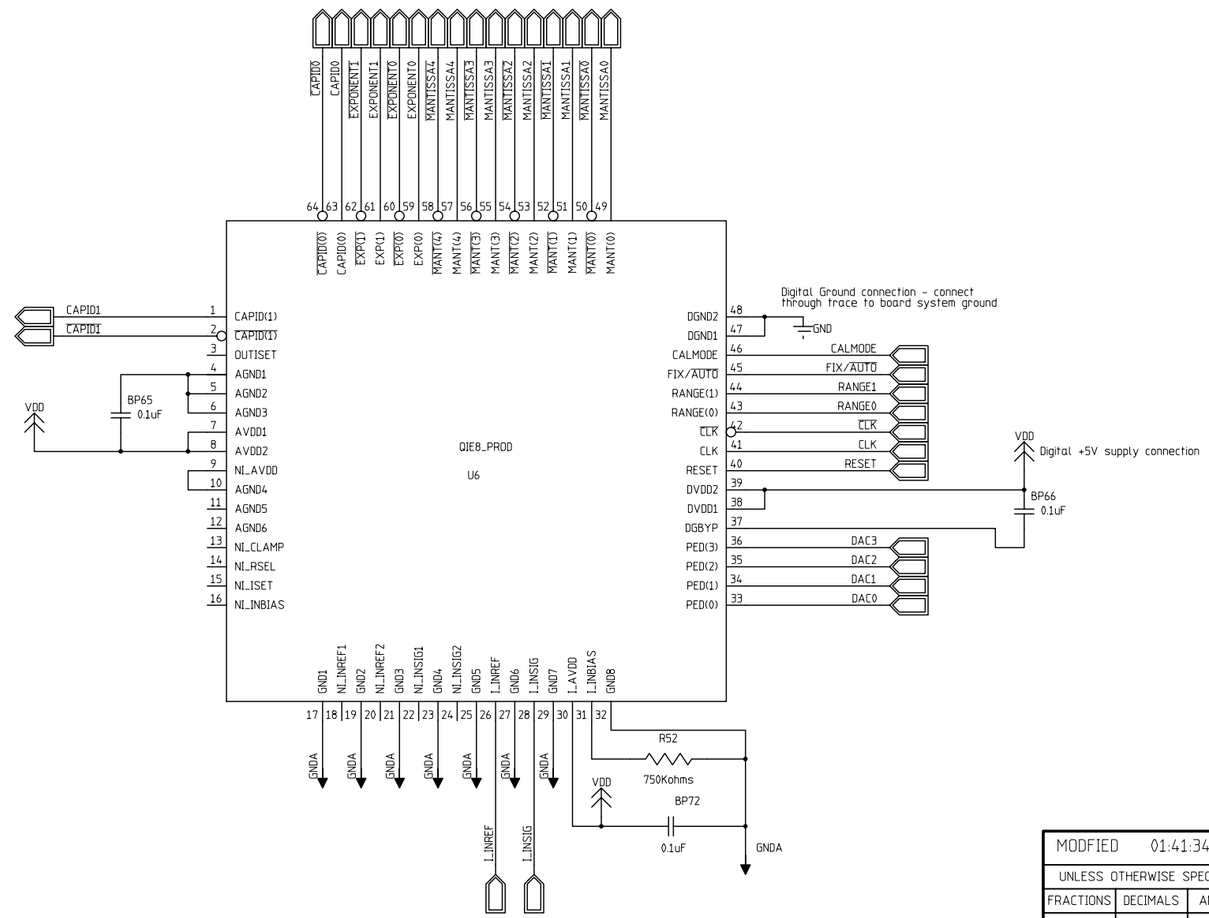

MODFIED 01:41:34 PM 09/27/2002

UNLESS OTHERWISE SPECIFIED			ORIGINATOR		
FRACTIONS	DECIMALS	ANGLES	DRAWN		
			CHECKED		
			APPROVED		

1. BREAK ALL SHARP EDGES 1/64 MAX.
2. DO NOT SCALE DWG.
3. DIMENSIONING IN ACCORD WITH ANSI Y14.5 STD's.

√ MAX. ALL MACHINED SURFACES

USED ON

MATERIAL

Fermi National Accelerator Laboratory
United States Department of Energy

C:\FEE\PreProd_QIE_HPD\PreProd_QIE_HPD.prj

SIZE	SCALE	FILMED	DRAWING NUMBER	PAGE 01 of 01	REV
C	1:1				

H=4ND; V=4LA

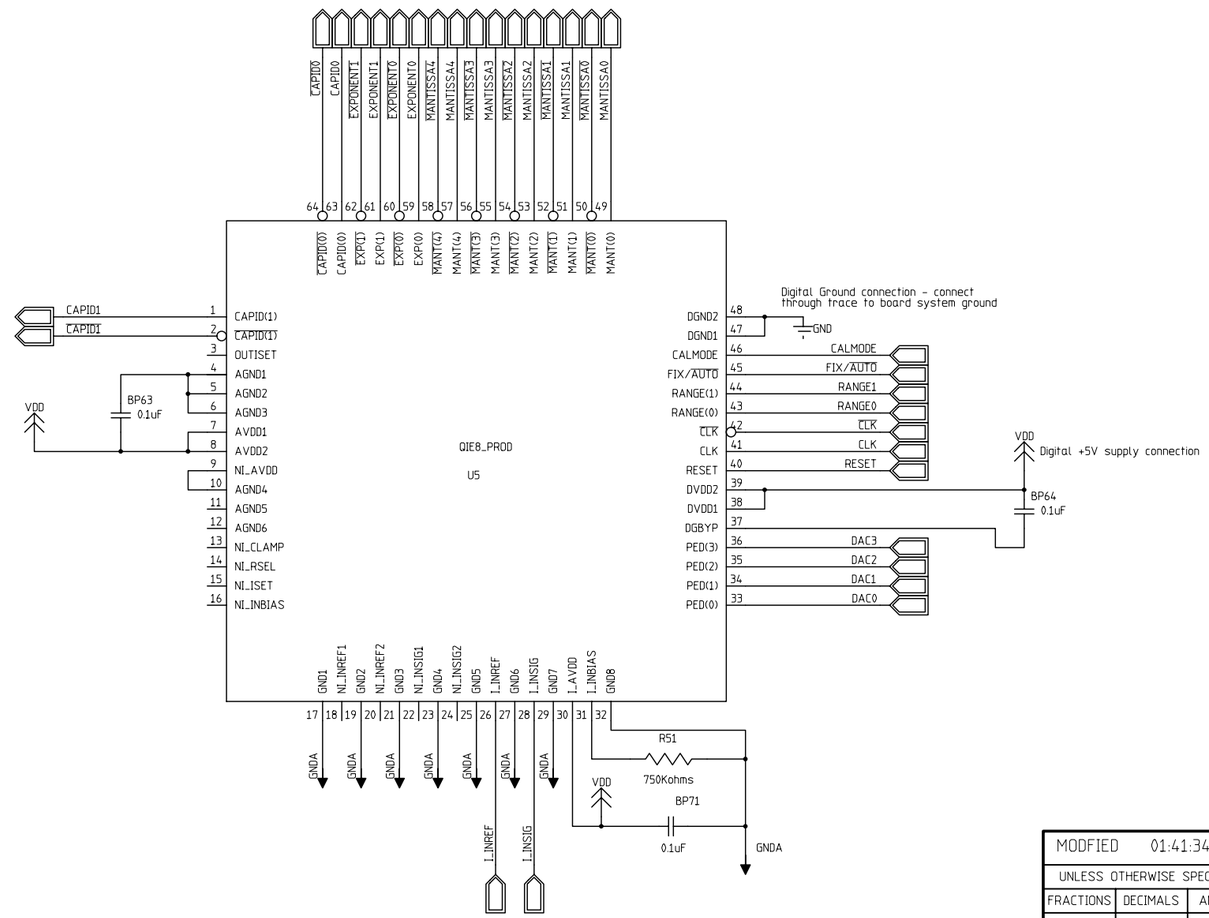

MODFIED 01:41:34 PM 09/27/2002				
UNLESS OTHERWISE SPECIFIED			ORIGINATOR	
FRACTIONS	DECIMALS	ANGLES	DRAWN	
			CHECKED	
1. BREAK ALL SHARP EDGES 1/64 MAX.			APPROVED	
2. DO NOT SCALE DWG.			USED ON	
3. DIMENSIONING IN ACCORD WITH ANSI Y14.5 STD's.			MATERIAL	
MAX. ALL MACHINED SURFACES				

Fermi National Accelerator Laboratory
United States Department of Energy

C:\FEE\PreProd_QIE_HPD\PreProd_QIE_HPD.prj

SIZE	SCALE	FILMED	DRAWING NUMBER	PAGE 01 of 01	REV
C	1:1				

H=4ND; V=4LA

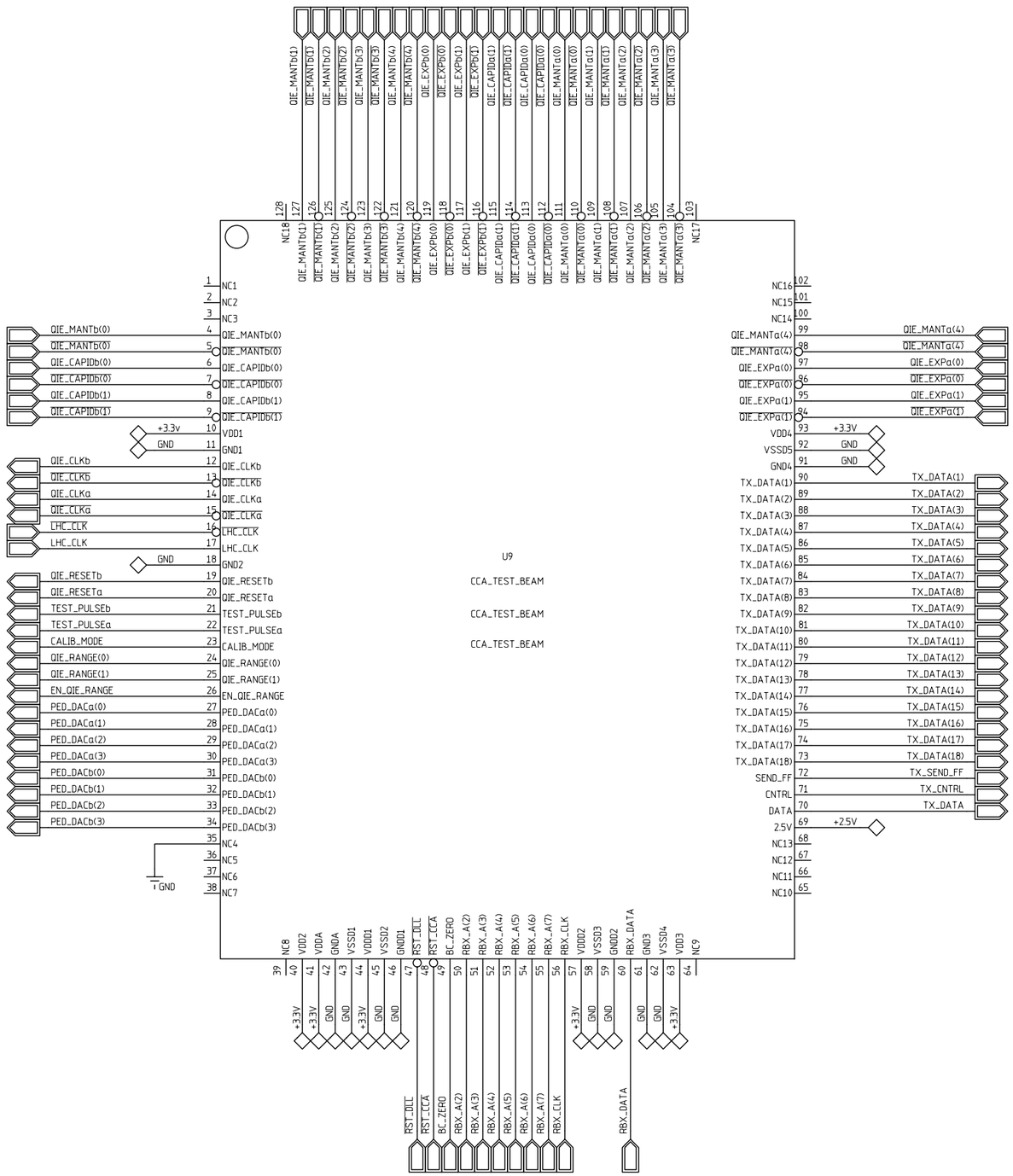

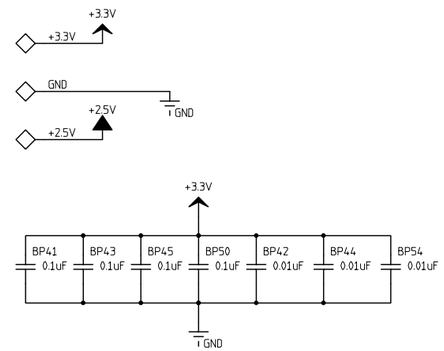

MODIFIED 09:50:13 AM 03/13/2002				
UNLESS OTHERWISE SPECIFIED			ORIGINATOR	
FRACTIONS	DECIMALS	ANGLES	DRAWN	
			CHECKED	
			APPROVED	

1. BREAK ALL SHARP EDGES 1/64 MAX.
2. DO NOT SCALE DWG.
3. DIMENSIONING IN ACCORD WITH ANSI Y14.5 STD's.

MAX. ALL MACHINED SURFACES

USED ON

MATERIAL

Fermi National Accelerator Laboratory
United States Department of Energy

C:\FEE\PreProd_QIE_HPD\PreProd_QIE_HPD.prj

SIZE	SCALE	FILMED	DRAWING NUMBER	PAGE 01 of 01	REV
C	1:1				

H=4ND; V=4LA

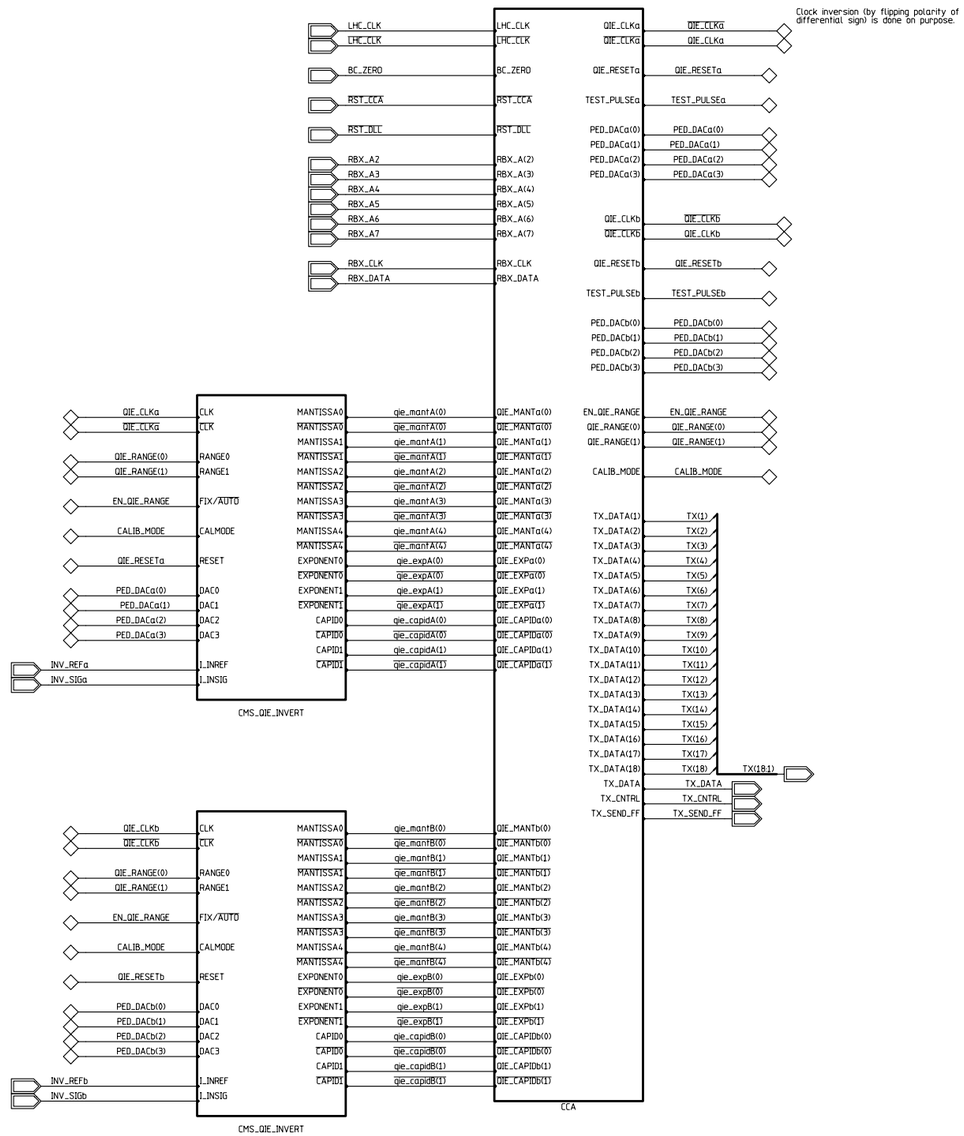

MODFIED 01:17:29 PM 09/04/2002			
UNLESS OTHERWISE SPECIFIED		ORIGINATOR	
FRACTIONS	DECIMALS	ANGLES	DRAWN
			CHECKED
			APPROVED

1. BREAK ALL SHARP EDGES 1/64 MAX.
2. DO NOT SCALE DWG.
3. DIMENSIONING IN ACCORD WITH ANSI Y14.5 STD'S.

MAX. ALL MACHINED SURFACES

USED ON

MATERIAL

Fermi National Accelerator Laboratory
United States Department of Energy

C:\FEE\PreProd_QIE_HPD\PreProd_QIE_HPD.prj

SIZE	SCALE	FILMED	DRAWING NUMBER	PAGE 01 of 01	REV
D	1:1				A

H=BND; V=4LA

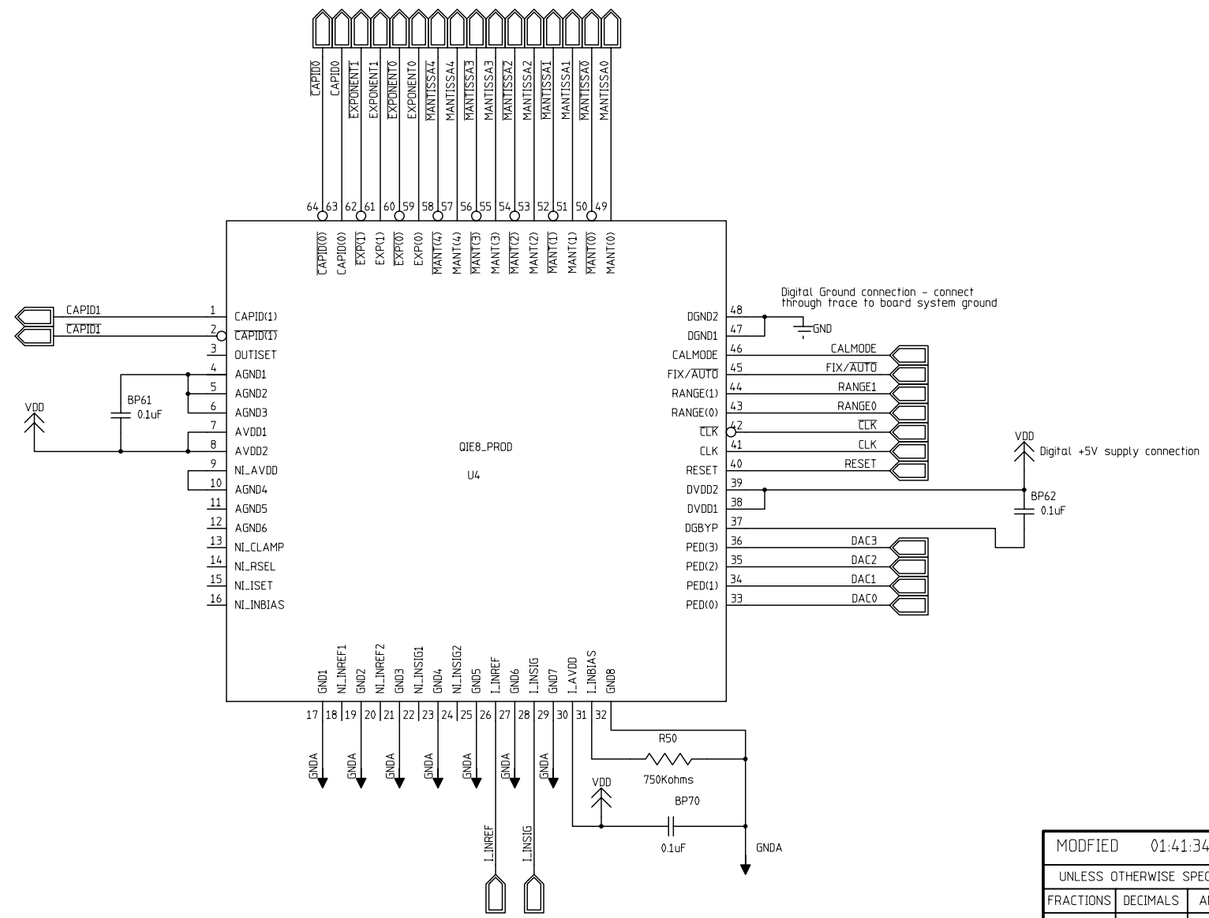

MODFIED 01:41:34 PM 09/27/2002				
UNLESS OTHERWISE SPECIFIED			ORIGINATOR	
FRACTIONS	DECIMALS	ANGLES	DRAWN	
			CHECKED	
			APPROVED	

1. BREAK ALL SHARP EDGES 1/64 MAX.
2. DO NOT SCALE DWG.
3. DIMENSIONING IN ACCORD WITH ANSI Y14.5 STD's.

√ MAX. ALL MACHINED SURFACES

USED ON

MATERIAL

Fermi National Accelerator Laboratory
United States Department of Energy

C:\FEE\PreProd_QIE_HPD\PreProd_QIE_HPD.prj

SIZE	SCALE	FILMED	DRAWING NUMBER	PAGE 01 of 01	REV
C	1:1				

H=4ND; V=4LA

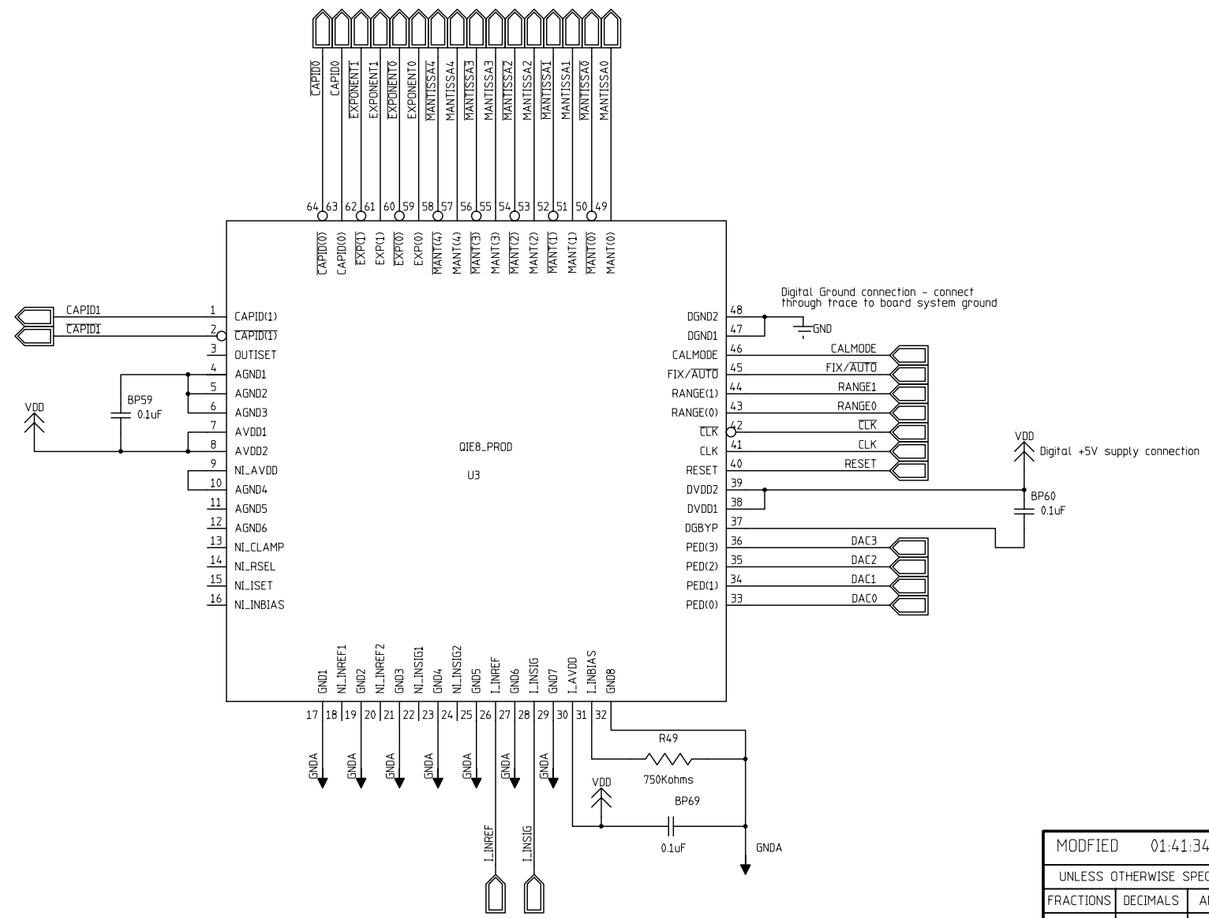

MODFIED 01:41:34 PM 09/27/2002				
UNLESS OTHERWISE SPECIFIED			ORIGINATOR	
FRACTIONS	DECIMALS	ANGLES	DRAWN	
			CHECKED	
1. BREAK ALL SHARP EDGES 1/64 MAX.			APPROVED	
2. DO NOT SCALE DWG.			USED ON	
3. DIMENSIONING IN ACCORD WITH ANSI Y14.5 STD's.			MATERIAL	
√ MAX. ALL MACHINED SURFACES				

Fermi National Accelerator Laboratory
United States Department of Energy

C:\FEE\PreProd_QIE_HPD\PreProd_QIE_HPD.prj

SIZE	SCALE	FILMED	DRAWING NUMBER	PAGE 01 of 01	REV
C	1:1				

H=4ND; V=4LA

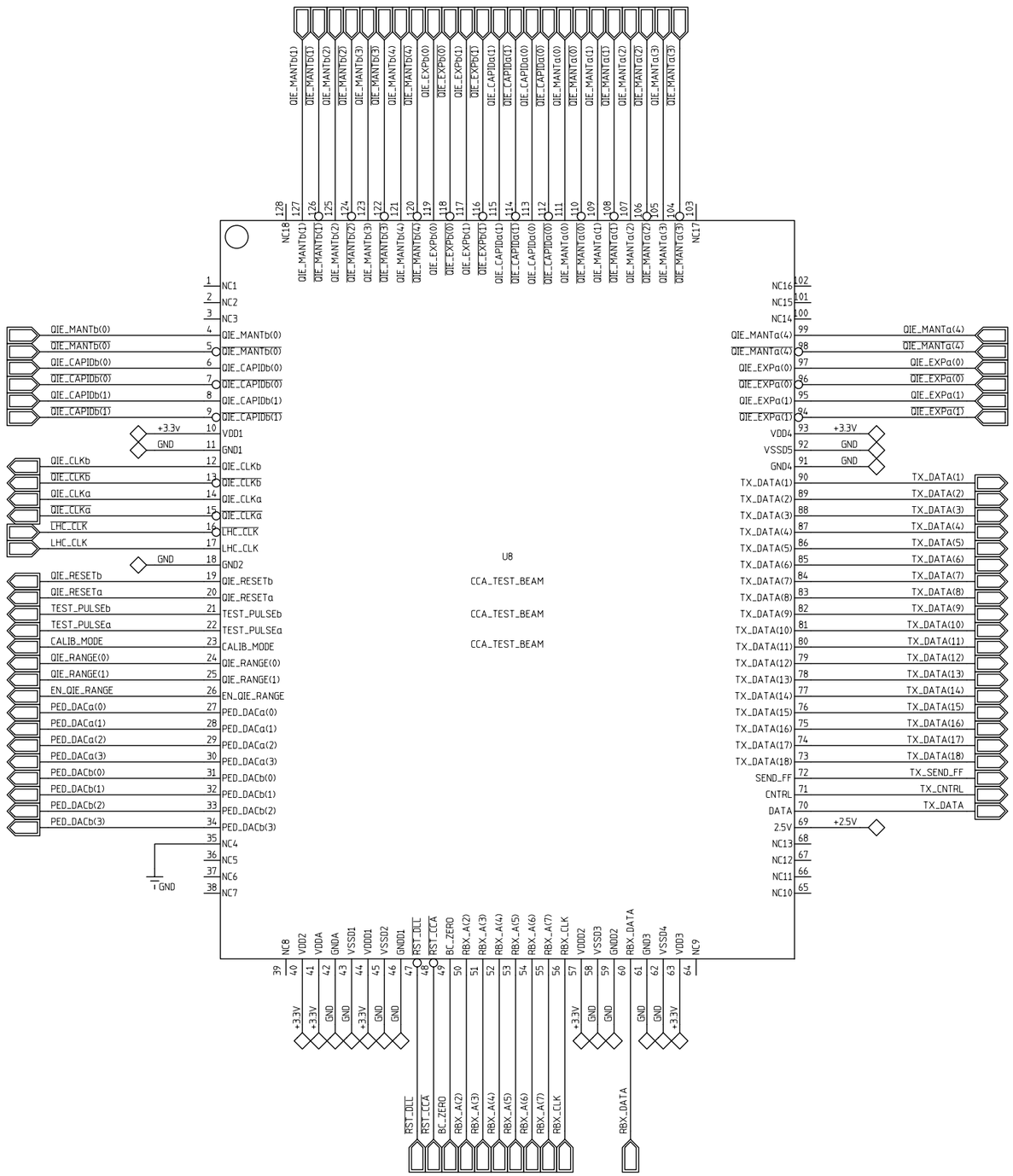

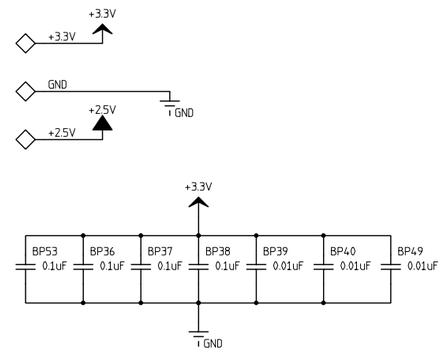

MODIFIED 09:50:13 AM 03/13/2002				
UNLESS OTHERWISE SPECIFIED			ORIGINATOR	
FRACTIONS	DECIMALS	ANGLES	DRAWN	
			CHECKED	
			APPROVED	

1. BREAK ALL SHARP EDGES 1/64 MAX.
2. DO NOT SCALE DWG.
3. DIMENSIONING IN ACCORD WITH ANSI Y14.5 STD's.

MAX. ALL MACHINED SURFACES

USED ON

MATERIAL

Fermi National Accelerator Laboratory
United States Department of Energy

C:\FEE\PreProd_QIE_HPD\PreProd_QIE_HPD.prj

SIZE	SCALE	FILMED	DRAWING NUMBER	PAGE 01 of 01	REV
C	1:1				

H=4ND; V=4LA

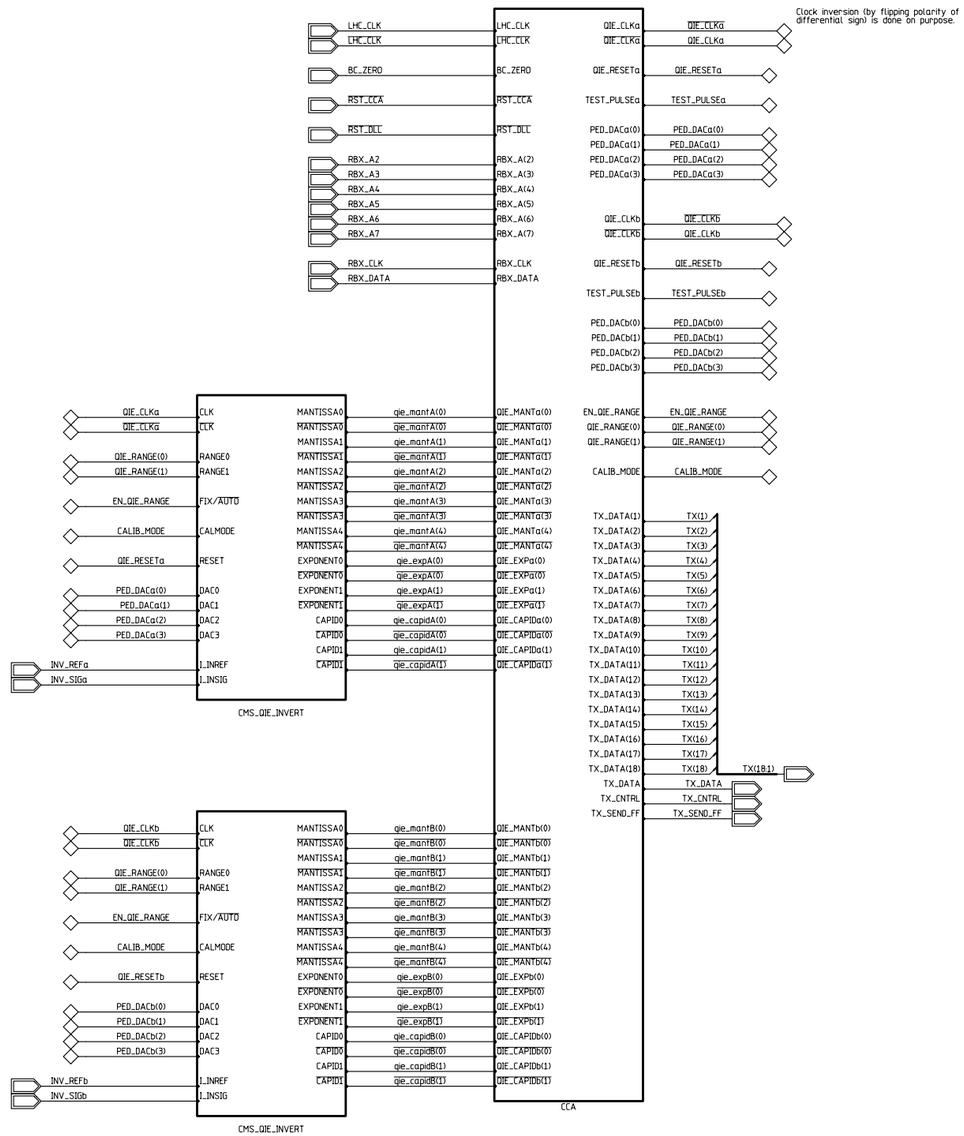

MODFIED 01:17:29 PM 09/04/2002			
UNLESS OTHERWISE SPECIFIED		ORIGINATOR	
FRACTIONS	DECIMALS	ANGLES	DRAWN
			CHECKED
			APPROVED

1. BREAK ALL SHARP EDGES 1/64 MAX.
2. DO NOT SCALE DWG.
3. DIMENSIONING IN ACCORD WITH ANSI Y14.5 STD'S.

MAX. ALL MACHINED SURFACES

USED ON

MATERIAL

Fermi National Accelerator Laboratory
United States Department of Energy

C:\FEE\PreProd_QIE_HPD\PreProd_QIE_HPD.prj

SIZE	SCALE	FILMED	DRAWING NUMBER	PAGE 01 of 01	REV
D	1:1				A

H=BND; V=4LA

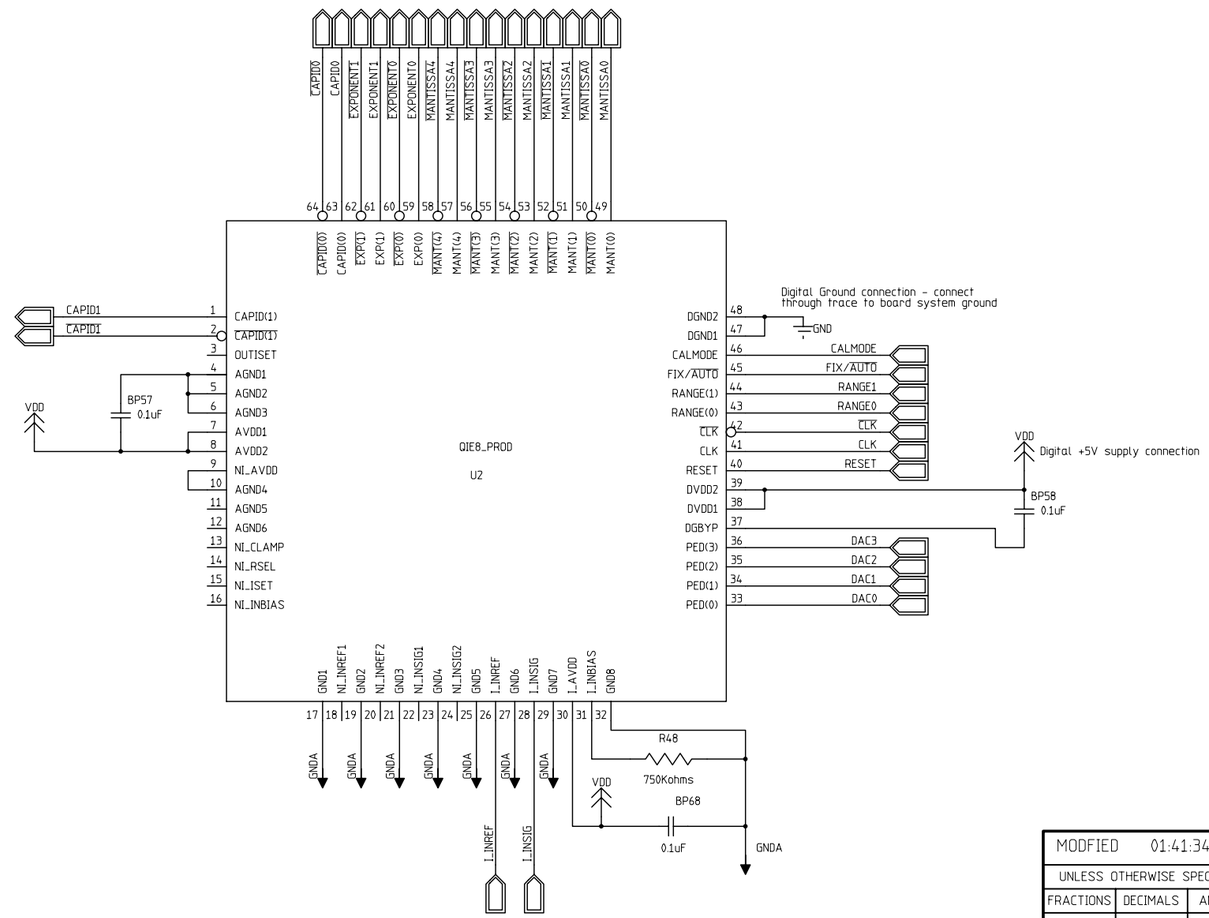

MODFIED 01:41:34 PM 09/27/2002				
UNLESS OTHERWISE SPECIFIED			ORIGINATOR	
FRACTIONS	DECIMALS	ANGLES	DRAWN	
			CHECKED	
1. BREAK ALL SHARP EDGES 1/64 MAX.			APPROVED	
2. DO NOT SCALE DWG.			USED ON	
3. DIMENSIONING IN ACCORD WITH ANSI Y14.5 STD's.			MATERIAL	
√ MAX. ALL MACHINED SURFACES				

Fermi National Accelerator Laboratory
United States Department of Energy

C:\FEE\PreProd_QIE_HPD\PreProd_QIE_HPD.prj

SIZE	SCALE	FILMED	DRAWING NUMBER	PAGE 01 of 01	REV
C	1:1				

H=4ND; V=4LA

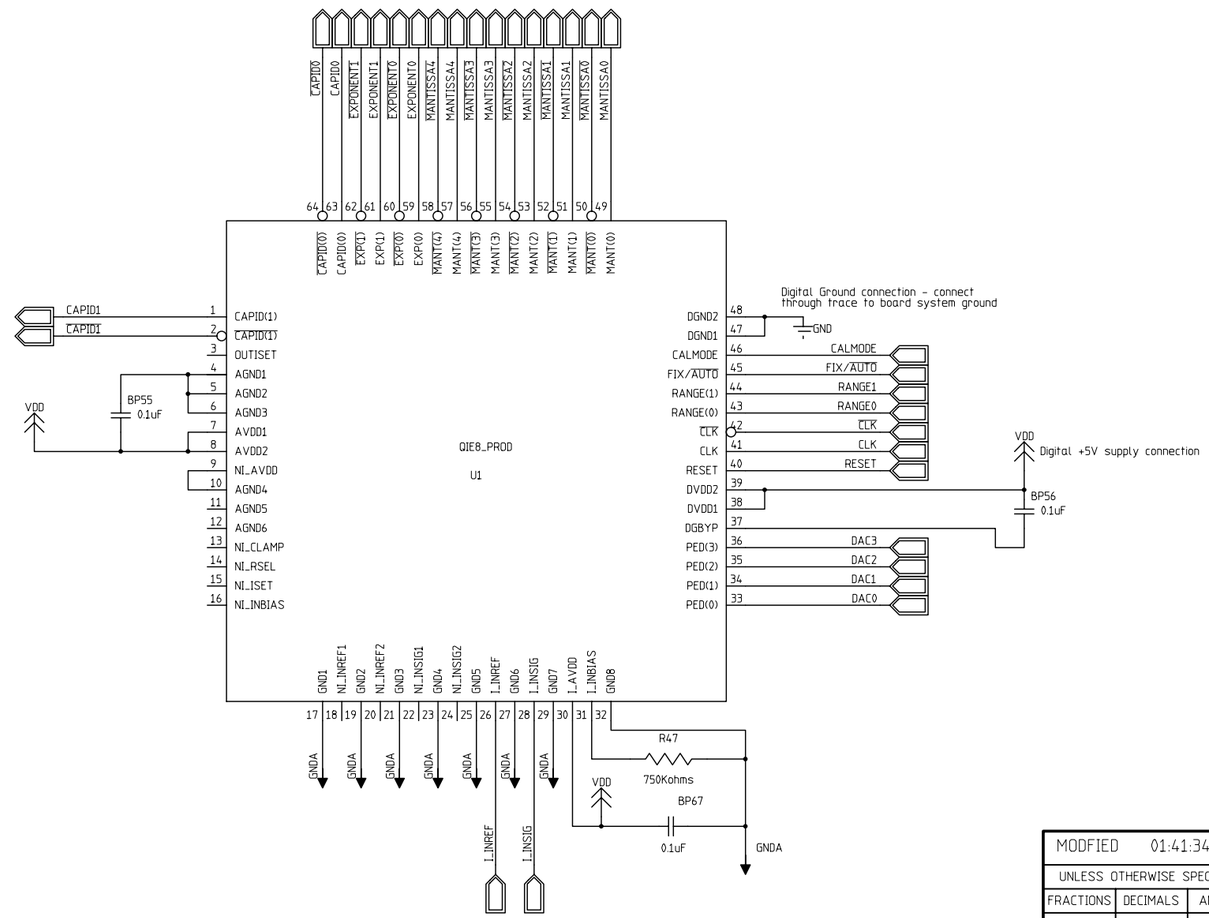

MODFIED 01:41:34 PM 09/27/2002				
UNLESS OTHERWISE SPECIFIED			ORIGINATOR	
FRACTIONS	DECIMALS	ANGLES	DRAWN	
			CHECKED	
1. BREAK ALL SHARP EDGES 1/64 MAX.			APPROVED	
2. DO NOT SCALE DWG.			USED ON	
3. DIMENSIONING IN ACCORD WITH ANSI Y14.5 STD's.			MATERIAL	
√ MAX. ALL MACHINED SURFACES				

Fermi National Accelerator Laboratory
United States Department of Energy

C:\FEE\PreProd_QIE_HPD\PreProd_QIE_HPD.prj

SIZE	SCALE	FILMED	DRAWING NUMBER	PAGE 01 of 01	REV
C	1:1				

H=4ND; V=4LA

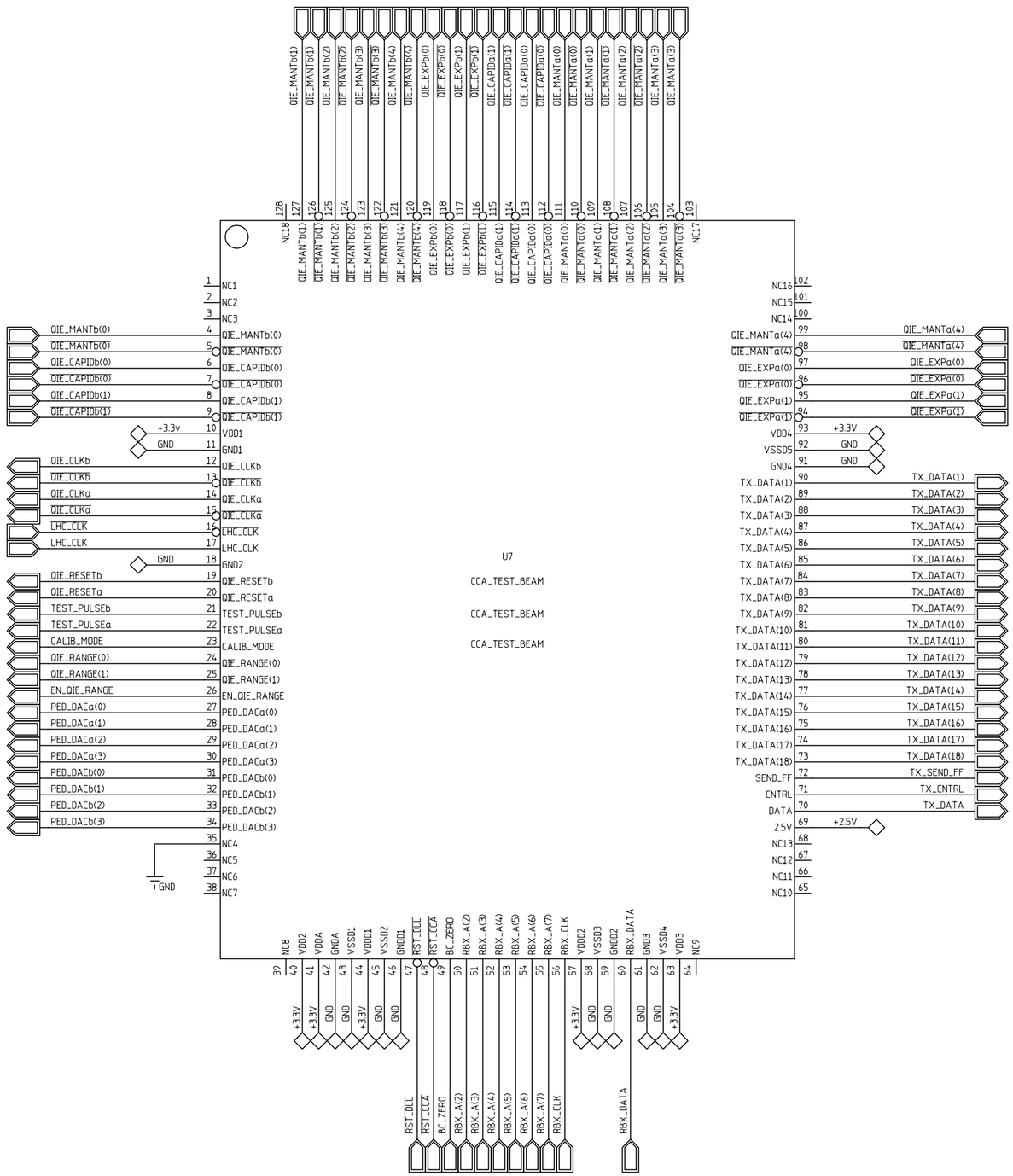

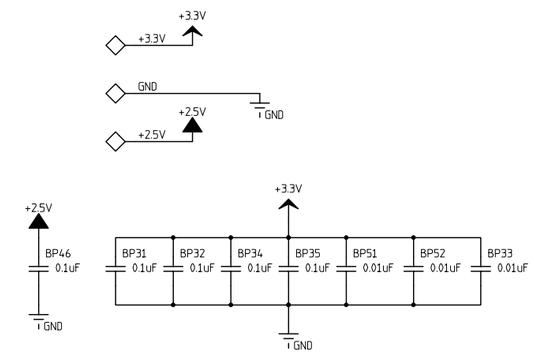

MODIFIED 09:50:13 AM 03/13/2002				
UNLESS OTHERWISE SPECIFIED			ORIGINATOR	
FRACTIONS	DECIMALS	ANGLES	DRAWN	
			CHECKED	
			APPROVED	

1. BREAK ALL SHARP EDGES 1/64 MAX.
2. DO NOT SCALE DWG.
3. DIMENSIONING IN ACCORD WITH ANSI Y14.5 STD's.

√ MAX. ALL MACHINED SURFACES

USED ON

MATERIAL

Fermi National Accelerator Laboratory
United States Department of Energy

C:\FEE\PreProd_QIE_HPD\PreProd_QIE_HPD.prj

SIZE	SCALE	FILMED	DRAWING NUMBER	PAGE 01 of 01	REV
C	1:1				

H=4ND; V=4LA