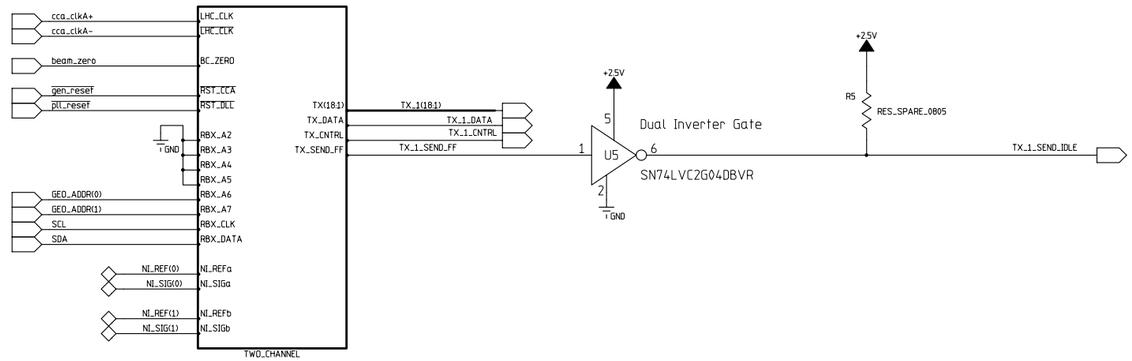

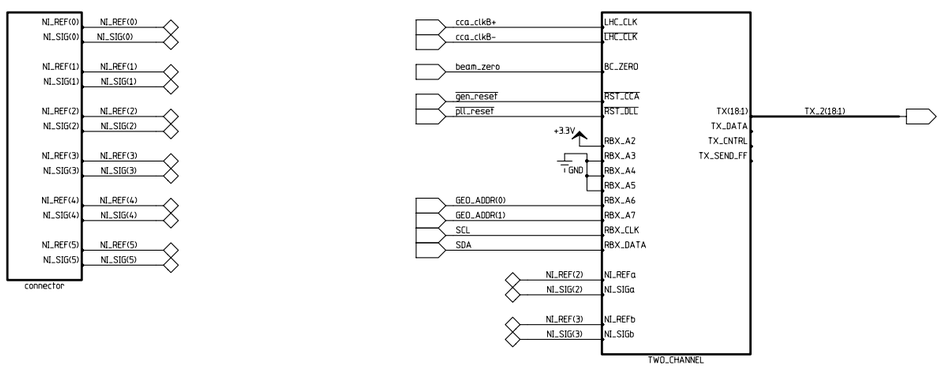

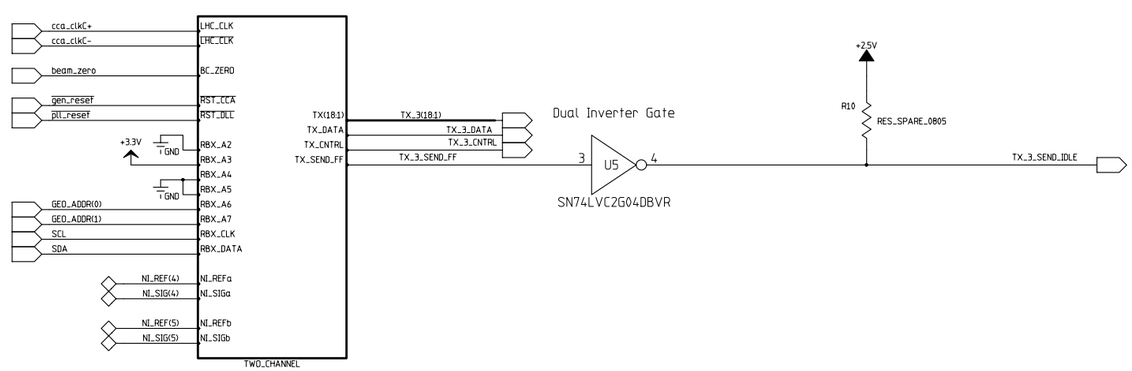

MODIFIED 2/16/2004 2:40:01 PM		Sheet 1 of 2	
EED Department	ORIGINATOR	T. Shaw	DATE 2/11/2004
	DRAWN	T. Shaw	DATE 2/11/2004
	CHECKED	checked	DATE date
	APPROVED	approved	DATE date

Fermi National Accelerator Laboratory
United States Department of Energy

D:\QIE_PRODUCTION\Prod_QIE_PMT\Prod_QIE_PMT.prj

SIZE	DRAWING NUMBER		REV
D	173513	Schematic Page 01 of 04	A

H=BND; V=4LA

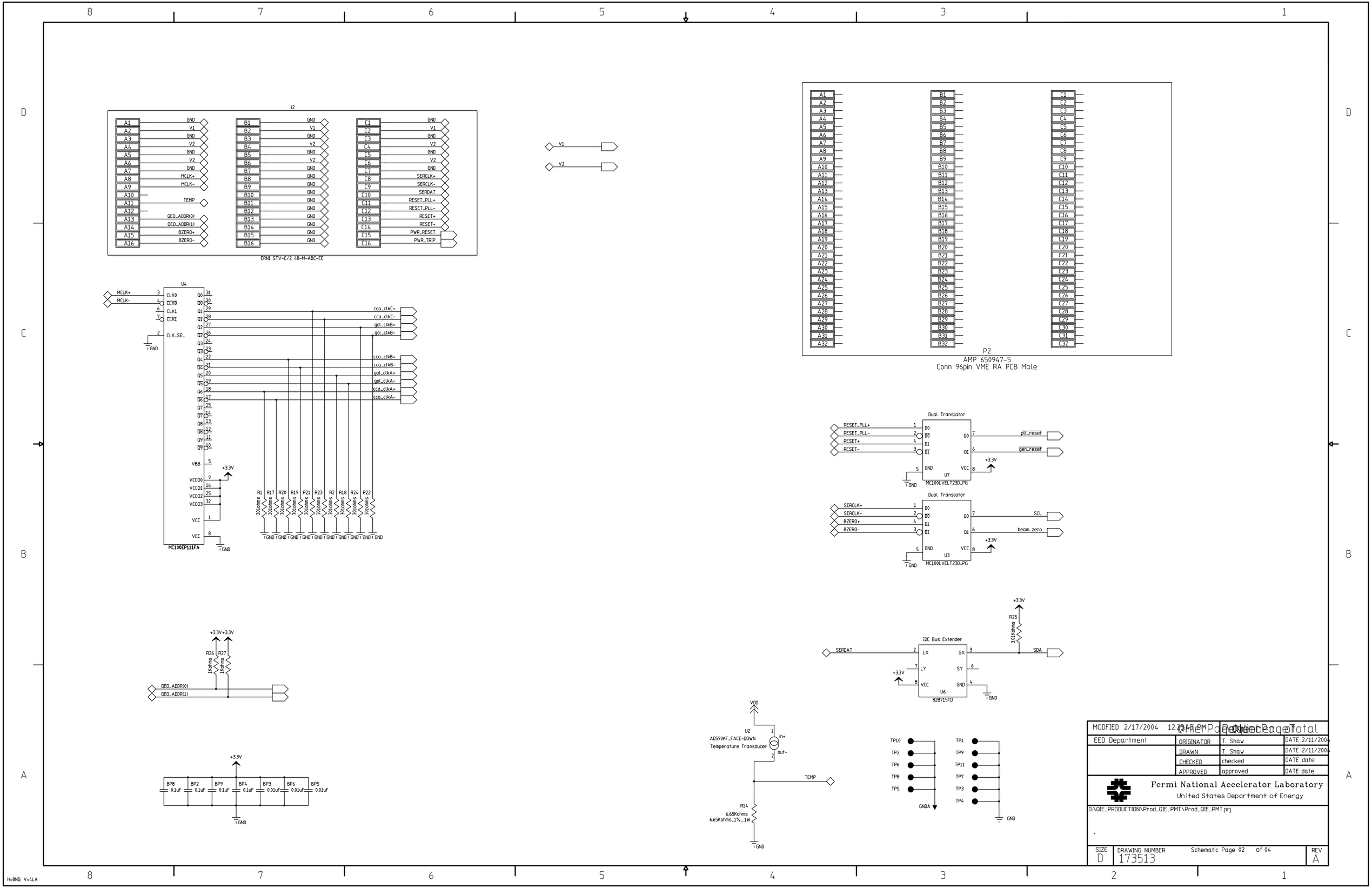
J2
ERNI STV-C/2 48-M-ABC-EE
U4
MC100EP111FA
P2
AMP 650947-5
Conn 96pin VME RA PCB Male
Dual Translator
U7
MC100LVELT23D_PG
U3
MC100LVELT23D_PG
I2C Bus Extender
U6
82B715TD
U2
AD590KF_FACE-DOWN
Temperature Transducer
MODFIED 2/17/2004 12:23:43 PM
EED Department
ORIGINATOR T. Shaw DATE 2/11/2004
DRAWN T. Shaw DATE 2/11/2004
CHECKED checked DATE date
APPROVED approved DATE date
Fermi National Accelerator Laboratory
United States Department of Energy
D:\QIE_PRODUCTION\Prod_QIE_PMT\Prod_QIE_PMT.prj
SIZE D
DRAWING NUMBER 173513
Schematic Page 02 of 04
REV A

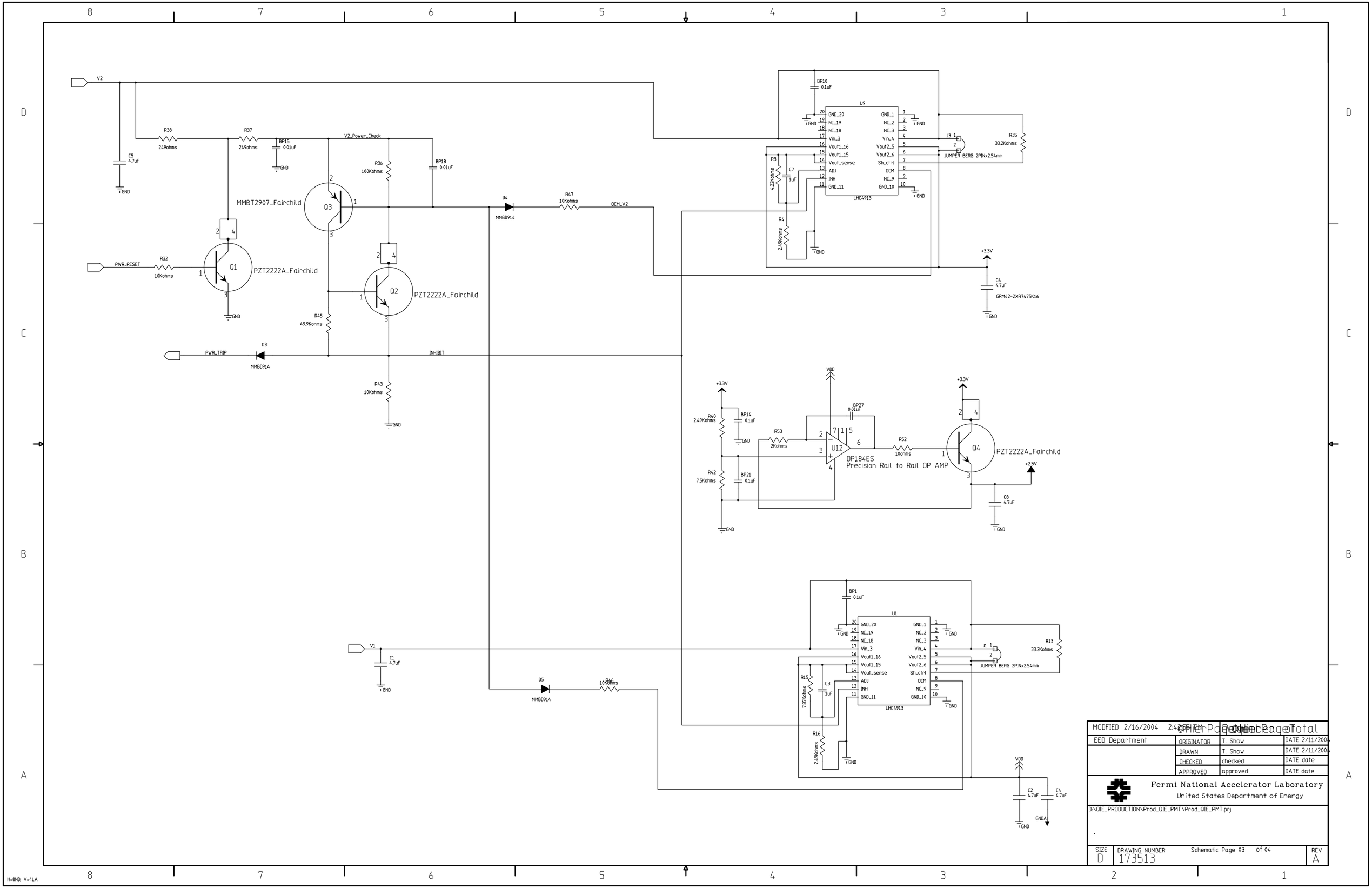
V2
R38
249ohms
R37
249ohms
BP15
0.01uF
V2_Power_Check
C5
4.7uF
GND
R36
100Kohms
BP18
0.01uF
MMBT2907_Fairchild
Q3
D4
MMBD914
R47
10Kohms
OCM_V2
PWR_RESET
R32
10Kohms
Q1
PZT2222A_Fairchild
Q2
PZT2222A_Fairchild
R45
49.9Kohms
PWR_TRIP
D3
MMBD914
INHIBIT
R43
10Kohms
BP10
0.1uF
U9
GND_20
NC_19
NC_18
Vin_3
Vout1_16
Vout1_15
Vout_sense
ADJ
INH
GND_11
GND_1
NC_2
NC_3
Vin_4
Vout2_5
Vout2_6
Sh_ctrl
OCM
NC_9
GND_10
LHC4913
R3
4.22Kohms
C7
1uF
R4
2.49Kohms
J3
JUMPER BERG 2PINx2.54mm
R35
33.2Kohms
+3.3V
C6
4.7uF
GRM42-2XR7475K16
VDD
BP27
0.01uF
R40
2.49Kohms
BP14
0.1uF
R53
2Kohms
U12
OP184ES
Precision Rail to Rail OP AMP
R52
10ohms
Q4
PZT2222A_Fairchild
+2.5V
C8
4.7uF
R42
7.5Kohms
BP21
0.1uF
BP1
0.1uF
U1
GND_20
NC_19
NC_18
Vin_3
Vout1_16
Vout1_15
Vout_sense
ADJ
INH
GND_11
GND_1
NC_2
NC_3
Vin_4
Vout2_5
Vout2_6
Sh_ctrl
OCM
NC_9
GND_10
LHC4913
J1
JUMPER BERG 2PINx2.54mm
R13
33.2Kohms
V1
C1
4.7uF
D5
MMBD914
R46
10Kohms
R15
7.87Kohms
C3
1uF
R16
2.49Kohms
C2
4.7uF
C4
4.7uF
GNDA
MODFIED 2/16/2004 2:42:55 PM
EED Department
ORIGINATOR T. Shaw DATE 2/11/2004
DRAWN T. Shaw DATE 2/11/2004
CHECKED checked DATE date
APPROVED approved DATE date
Fermi National Accelerator Laboratory
United States Department of Energy
D:\QIE_PRODUCTION\Prod_QIE_PMT\Prod_QIE_PMT.prj
SIZE D
DRAWING NUMBER 173513
Schematic Page 03 of 04
REV A
H=8ND; V=4LA

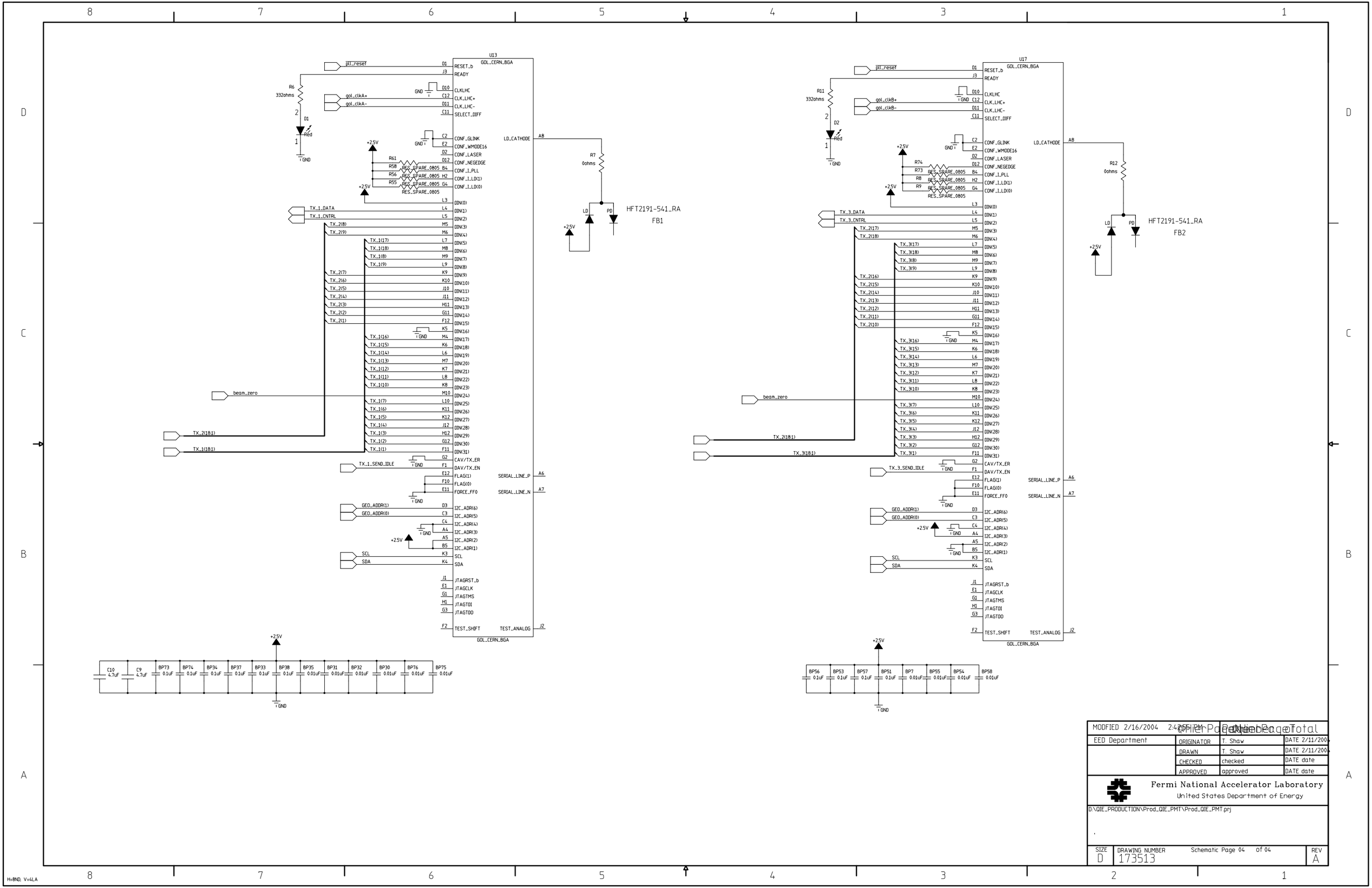
U13
GOL_CERN_BGA
U17
GOL_CERN_BGA
HFT2191-541_RA
FB1
HFT2191-541_RA
FB2
pll_reset
gol_clkA+
gol_clkA-
gol_clkB+
gol_clkB-
beam_zero
TX_1_DATA
TX_1_CNTRL
TX_1_SEND_IDLE
TX_3_DATA
TX_3_CNTRL
TX_3_SEND_IDLE
GEO_ADDR(1)
GEO_ADDR(0)
SCL
SDA
RESET_b
READY
CLKLHC
CLK_LHC+
CLK_LHC-
SELECT_DIFF
CONF_GLINK
CONF_WMODE16
CONF_LASER
CONF_NEGEDGE
CONF_I_PLL
CONF_I_LD(1)
CONF_I_LD(0)
LD_CATHODE
CAV/TX_ER
DAV/TX_EN
FLAG(1)
FLAG(0)
FORCE_FF0
SERIAL_LINE_P
SERIAL_LINE_N
JTAGRST_b
JTAGCLK
JTAGTMS
JTAGTDI
JTAGTDO
TEST_SHIFT
TEST_ANALOG
+2.5V
GND
Red
R6
332ohms
R7
0ohms
R11
332ohms
R12
0ohms
LD
PD
C10
4.7uF
C9
4.7uF
BP73
0.1uF
BP74
0.1uF
BP34
0.1uF
BP37
0.1uF
BP33
0.1uF
BP38
0.1uF
BP35
0.01uF
BP31
0.01uF
BP32
0.01uF
BP30
0.01uF
BP76
0.01uF
BP75
0.01uF
BP56
0.1uF
BP53
0.1uF
BP57
0.1uF
BP51
0.1uF
BP7
0.01uF
BP55
0.01uF
BP54
0.01uF
BP58
0.01uF
MODFIED 2/16/2004 2:42:55 PM
EED Department
ORIGINATOR T. Shaw DATE 2/11/2004
DRAWN T. Shaw DATE 2/11/2004
CHECKED checked DATE date
APPROVED approved DATE date
Fermi National Accelerator Laboratory
United States Department of Energy
D:\QIE_PRODUCTION\Prod_QIE_PMT\Prod_QIE_PMT.prj
SIZE D
DRAWING NUMBER 173513
Schematic Page 04 of 04
REV A
H=8ND; V=4LA

Need to add D shell mounting holes

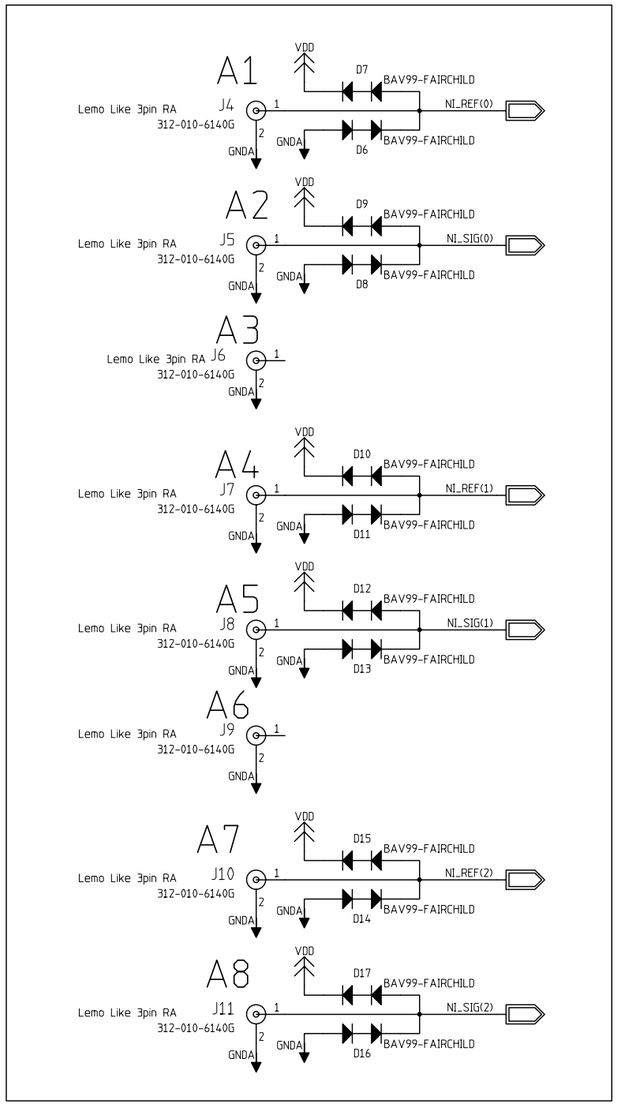

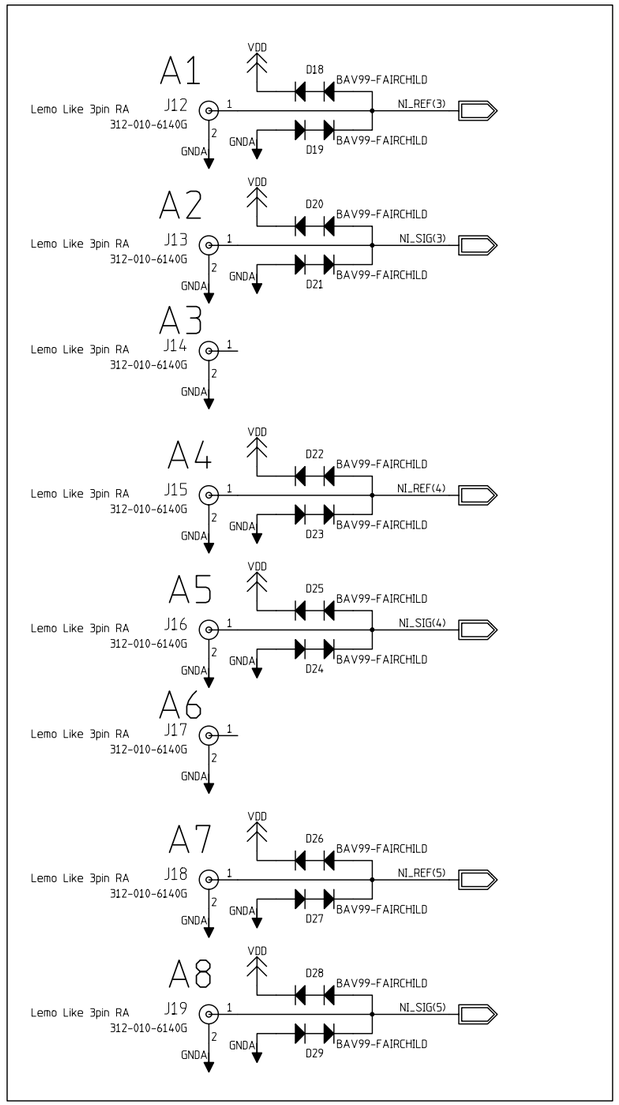

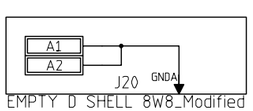

EMPTY D SHELL 8W8_Modified

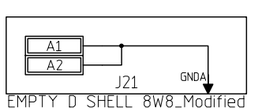

EMPTY D SHELL 8W8_Modified

MODIFIED 2:06:09 PM 5/18/2004				
UNLESS OTHERWISE SPECIFIED			ORIGINATOR	
FRACTIONS	DECIMALS	ANGLES	DRAWN	
			CHECKED	
			APPROVED	

1. BREAK ALL SHARP EDGES 1/64 MAX.
2. DO NOT SCALE DWG.
3. DIMENSIONING IN ACCORD WITH ANSI Y14.5 STD's.

√ MAX. ALL MACHINED SURFACES

USED ON

MATERIAL

Fermi National Accelerator Laboratory
United States Department of Energy

D:\QIE_PRODUCTION\Prod_QIE_PMT\Prod_QIE_PMT.prj

SIZE	SCALE	FILMED	DRAWING NUMBER	PAGE 01	of 01	REV
C	1:1					

H=4ND; V=4LA

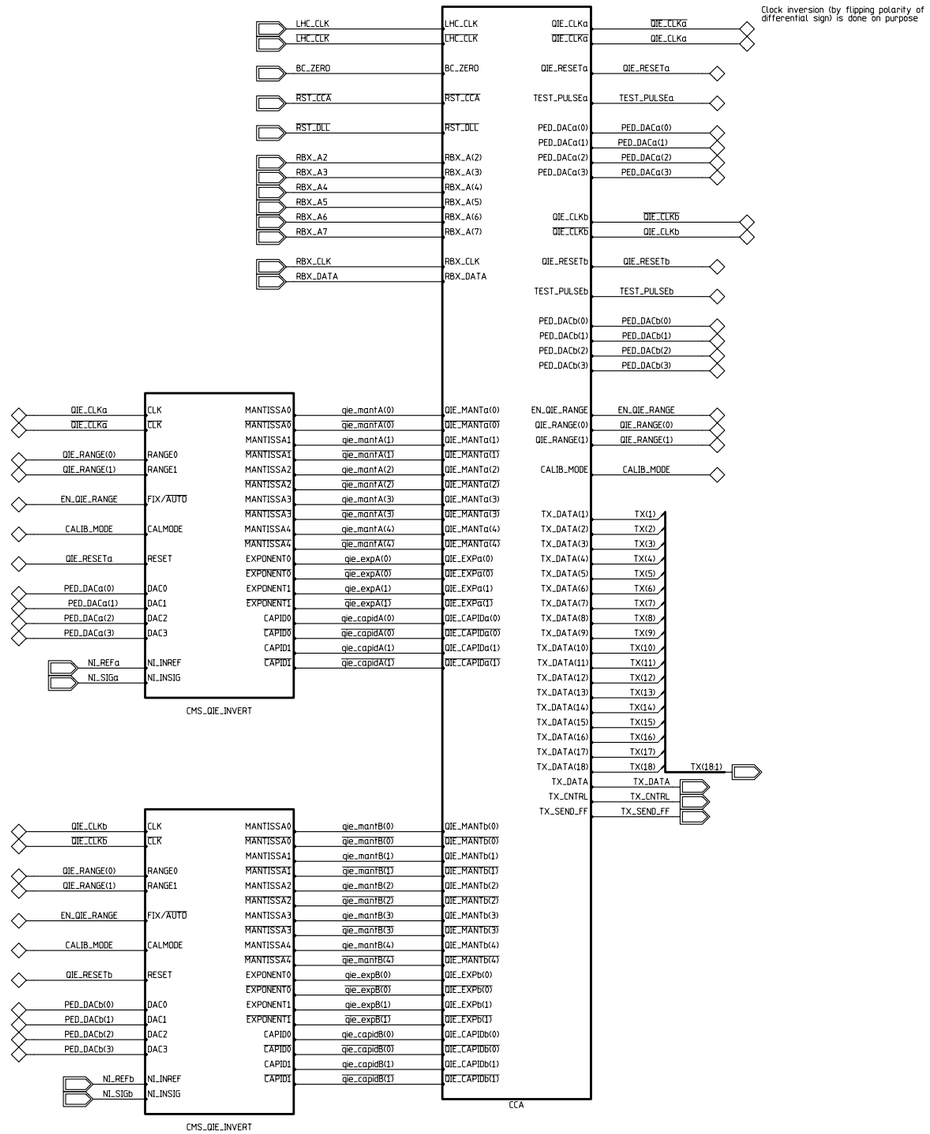

MODFIED 2:43:50 PM 11/19/2002			
UNLESS OTHERWISE SPECIFIED		ORIGINATOR	
FRACTIONS	DECIMALS	ANGLES	DRAWN
			CHECKED
			APPROVED

1. BREAK ALL SHARP EDGES 1/64 MAX.
2. DO NOT SCALE DWG.
3. DIMENSIONING IN ACCORD WITH ANSI Y14.5 STD's.

MAX. ALL MACHINED SURFACES

USED ON

MATERIAL

Fermi National Accelerator Laboratory
United States Department of Energy

D:\QIE_PRODUCTION\Prod_QIE_PMT\Prod_QIE_PMT.prj

SIZE	SCALE	FILMED	DRAWING NUMBER	PAGE 01 of 01	REV
D	1:1				A

H=BND; V=4LA

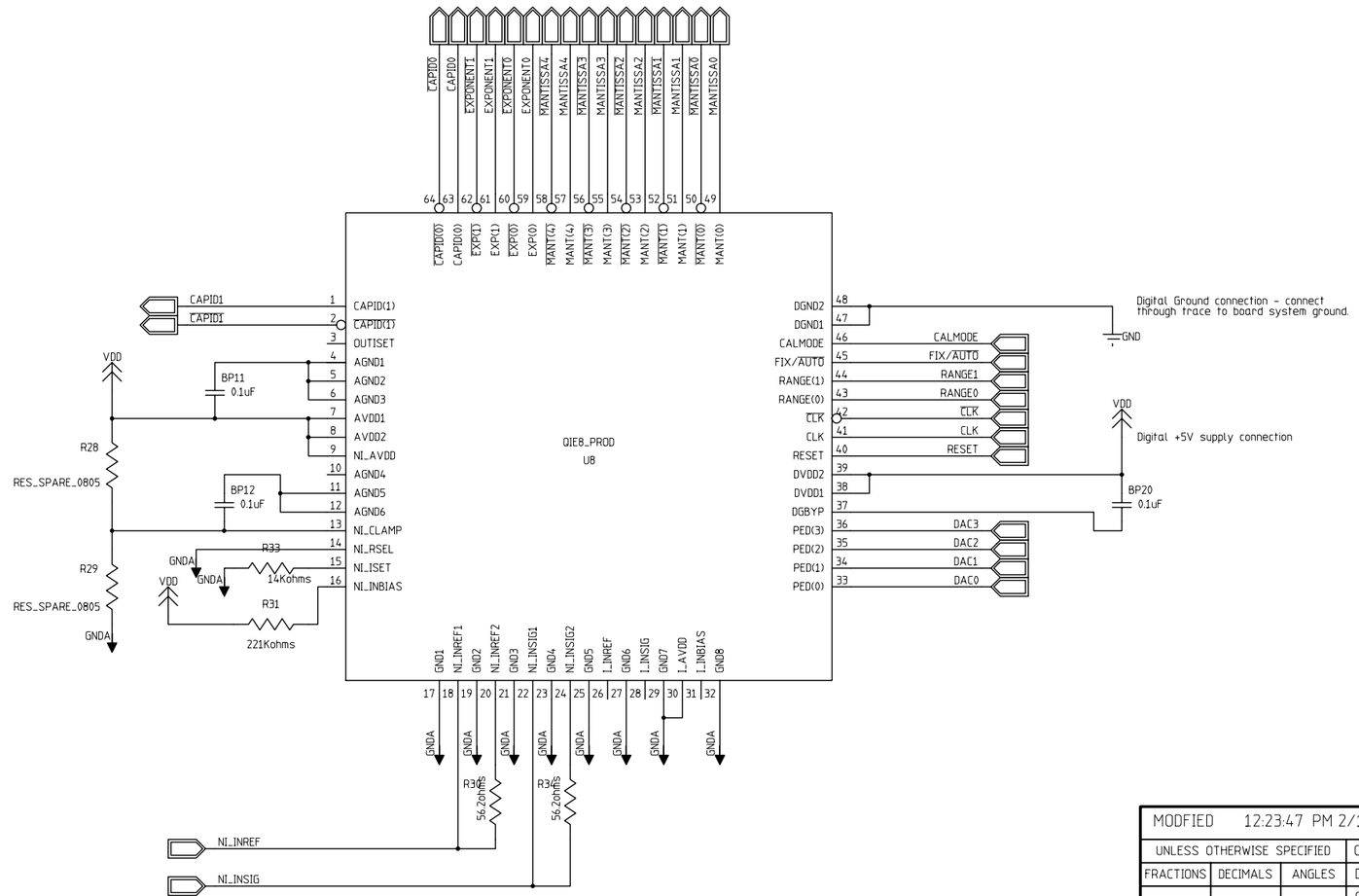

NI_INREF/NI_INSIG
use 56 ohm serial resistor on second input pin for 50 ohm inputs
use 110 ohm serial resistor on second input pin for 93 ohm inputs

MODFIED 12:23:47 PM 2/17/2004				
UNLESS OTHERWISE SPECIFIED			ORIGINATOR	
FRACTIONS	DECIMALS	ANGLES	DRAWN	
			CHECKED	
1. BREAK ALL SHARP EDGES 1/64 MAX.			APPROVED	
2. DO NOT SCALE DWG.			USED ON	
3. DIMENSIONING IN ACCORD WITH ANSI Y14.5 STD's.			MATERIAL	
MAX. ALL MACHINED SURFACES				

Fermi National Accelerator Laboratory
United States Department of Energy

D:\QIE_PRODUCTION\Prod_QIE_PMT\Prod_QIE_PMT.prj

SIZE	SCALE	FILMED	DRAWING NUMBER	PAGE 01 of 01	REV
C	1:1				

H=4ND; V=4LA

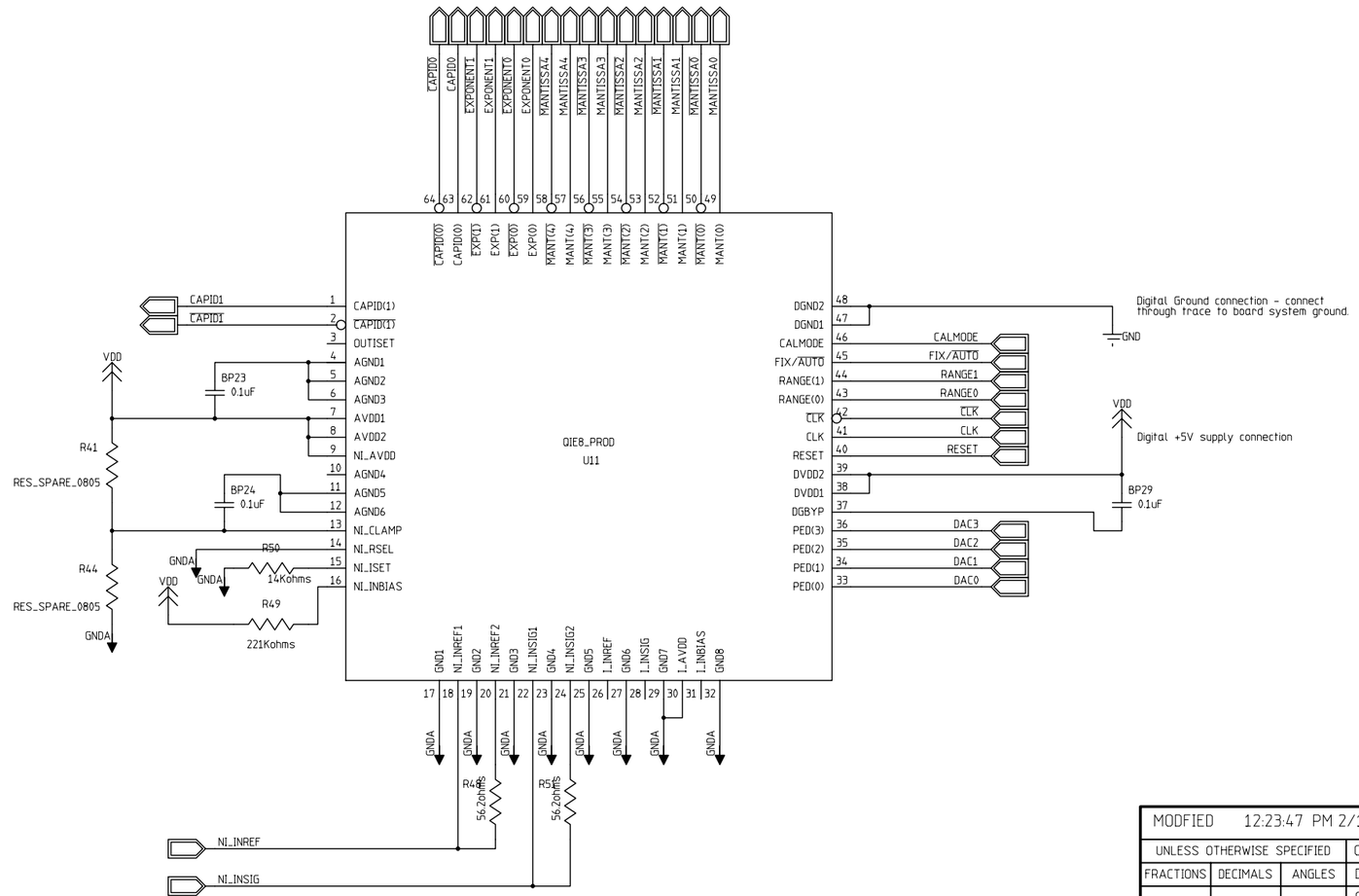

NI_INREF/NI_INSIG
use 56 ohm serial resistor on second input pin for 50 ohm inputs
use 110 ohm serial resistor on second input pin for 93 ohm inputs

MODIFIED 12:23:47 PM 2/17/2004				
UNLESS OTHERWISE SPECIFIED			ORIGINATOR	
FRACTIONS	DECIMALS	ANGLES	DRAWN	
			CHECKED	
			APPROVED	

1. BREAK ALL SHARP EDGES 1/64 MAX.
2. DO NOT SCALE DWG.
3. DIMENSIONING IN ACCORD WITH ANSI Y14.5 STD's.

MAX. ALL MACHINED SURFACES

USED ON

MATERIAL

Fermi National Accelerator Laboratory
United States Department of Energy

D:\QIE_PRODUCTION\Prod_QIE_PMT\Prod_QIE_PMT.prj

SIZE	SCALE	FILMED	DRAWING NUMBER	PAGE 01 of 01	REV
C	1:1				

H=4ND; V=4LA

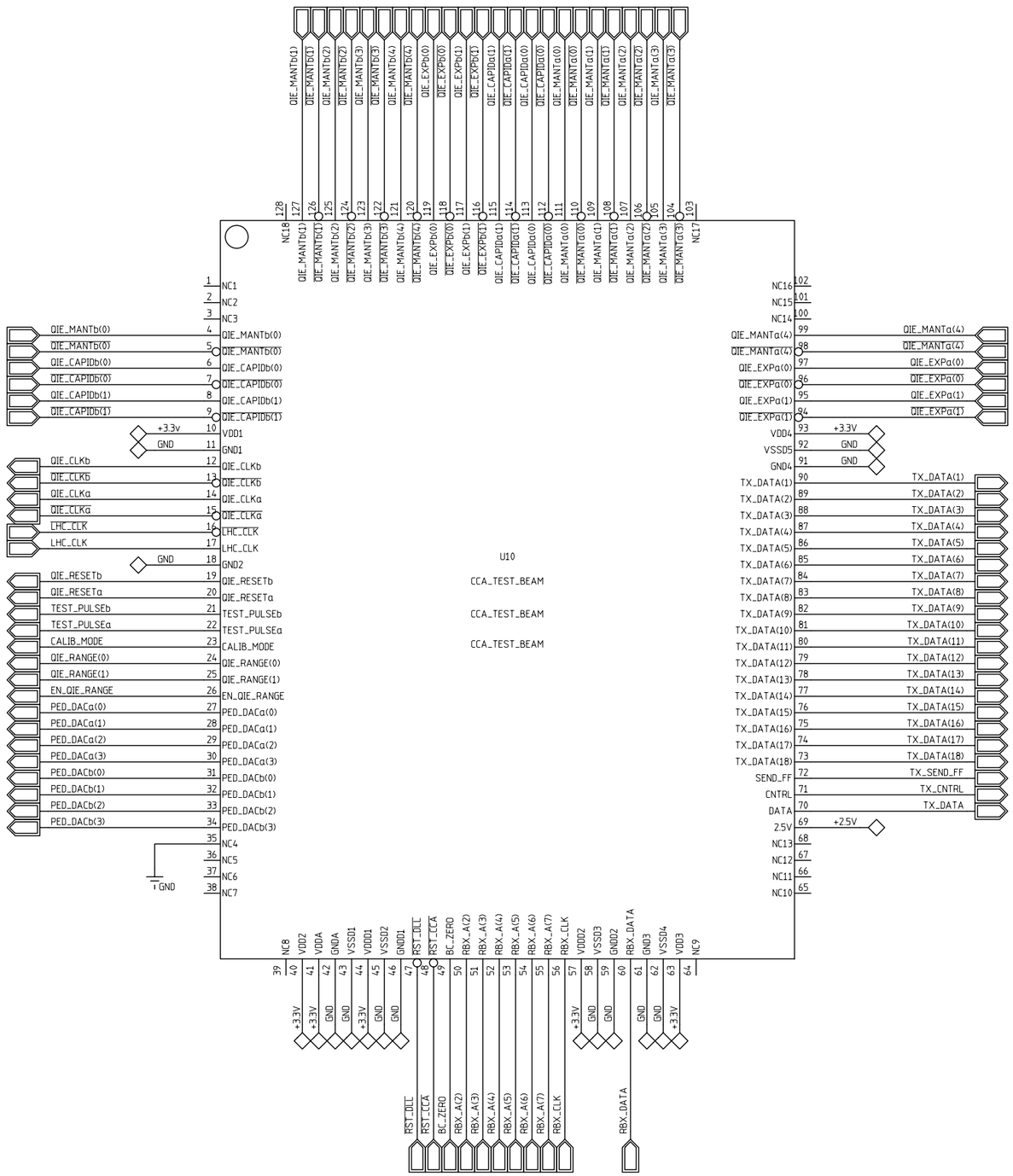

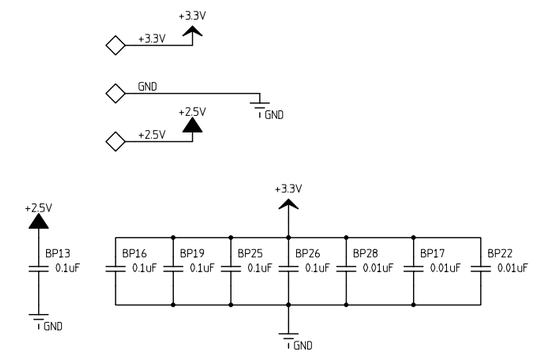

MODIFIED 9:50:13 AM 3/13/2002				
UNLESS OTHERWISE SPECIFIED			ORIGINATOR	
FRACTIONS	DECIMALS	ANGLES	DRAWN	
			CHECKED	
			APPROVED	

1. BREAK ALL SHARP EDGES 1/64 MAX.
2. DO NOT SCALE DWG.
3. DIMENSIONING IN ACCORD WITH ANSI Y14.5 STD's.

MAX. ALL MACHINED SURFACES

USED ON

MATERIAL

Fermi National Accelerator Laboratory
United States Department of Energy

D:\QIE_PRODUCTION\Prod_QIE_PMT\Prod_QIE_PMT.prj

SIZE	SCALE	FILMED	DRAWING NUMBER	PAGE 01 of 01	REV
C	1:1				

H=4ND; V=4LA

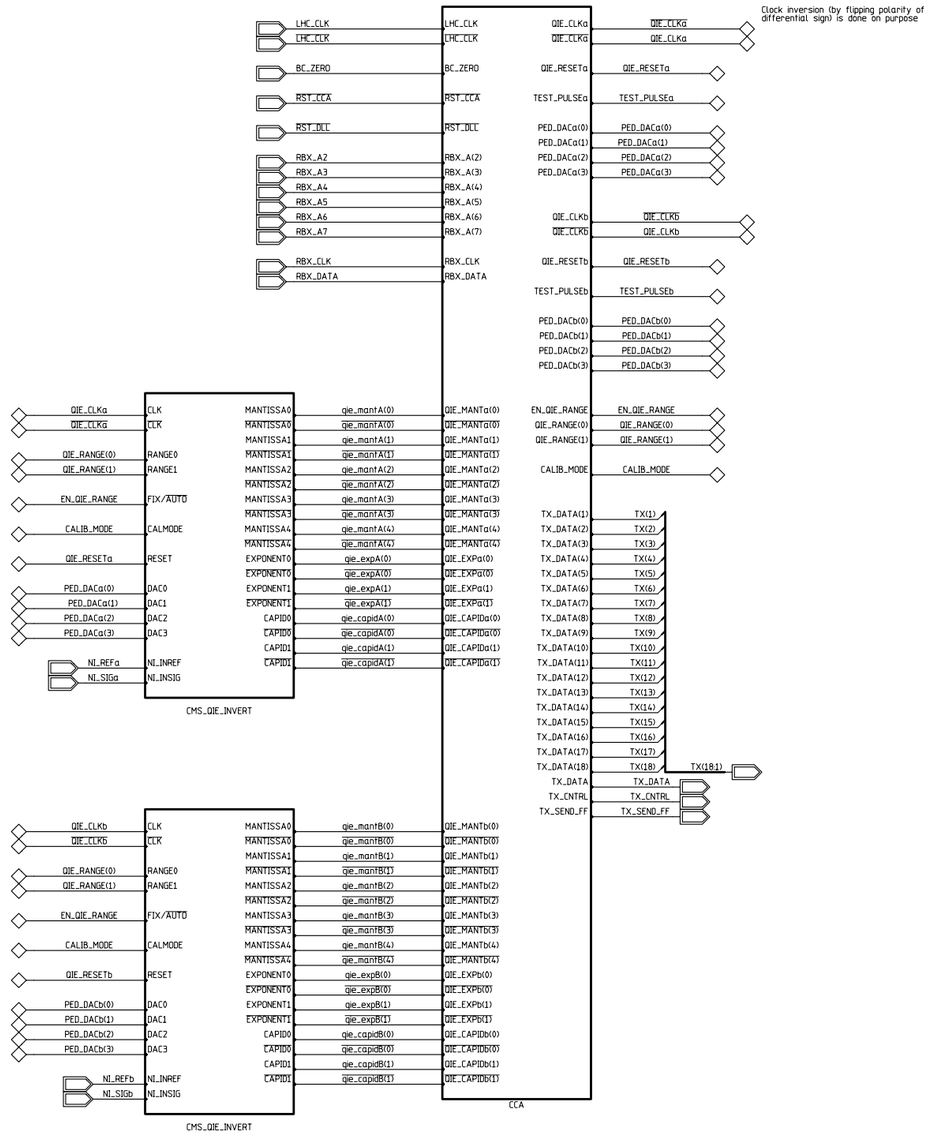

MODFIED 2:43:50 PM 11/19/2002			
UNLESS OTHERWISE SPECIFIED		ORIGINATOR	
FRACTIONS	DECIMALS	ANGLES	DRAWN
			CHECKED
			APPROVED

1. BREAK ALL SHARP EDGES 1/64 MAX.
2. DO NOT SCALE DWG.
3. DIMENSIONING IN ACCORD WITH ANSI Y14.5 STD's.

MAX. ALL MACHINED SURFACES

USED ON

MATERIAL

Fermi National Accelerator Laboratory
United States Department of Energy

D:\QIE_PRODUCTION\Prod_QIE_PMT\Prod_QIE_PMT.prj

SIZE	SCALE	FILMED	DRAWING NUMBER	PAGE 01 of 01	REV
D	1:1				A

H=BND; V=4LA

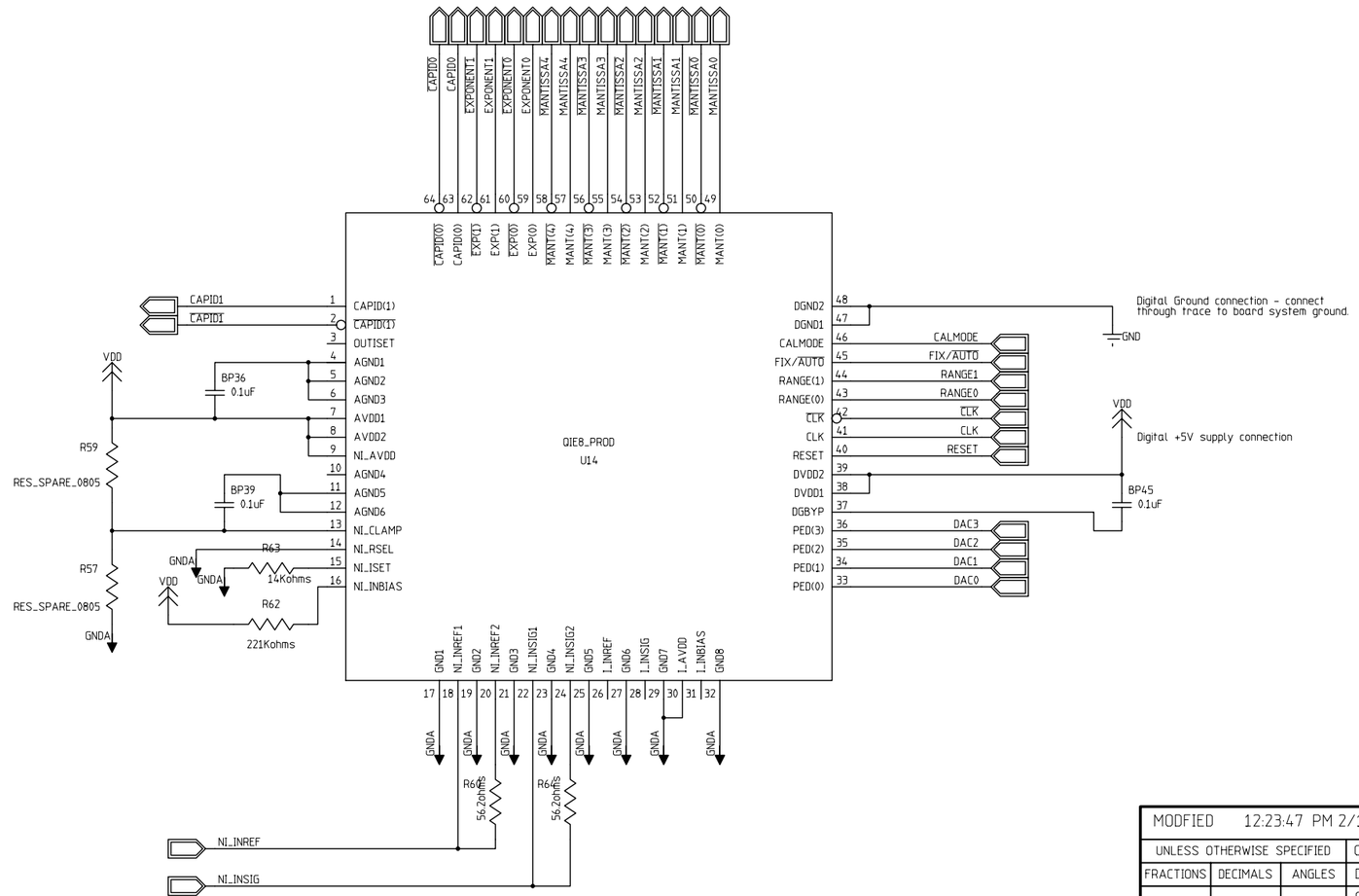

NI_INREF/NI_INSIG
use 56 ohm serial resistor on second input pin for 50 ohm inputs
use 110 ohm serial resistor on second input pin for 93 ohm inputs

MODFIED 12:23:47 PM 2/17/2004				
UNLESS OTHERWISE SPECIFIED			ORIGINATOR	
FRACTIONS	DECIMALS	ANGLES	DRAWN	
			CHECKED	
			APPROVED	

1. BREAK ALL SHARP EDGES 1/64 MAX.
2. DO NOT SCALE DWG.
3. DIMENSIONING IN ACCORD WITH ANSI Y14.5 STD's.

MAX. ALL MACHINED SURFACES

USED ON

MATERIAL

Fermi National Accelerator Laboratory
United States Department of Energy

D:\QIE_PRODUCTION\Prod_QIE_PMT\Prod_QIE_PMT.prj

SIZE	SCALE	FILMED	DRAWING NUMBER	PAGE 01 of 01	REV
C	1:1				

H=4ND; V=4LA

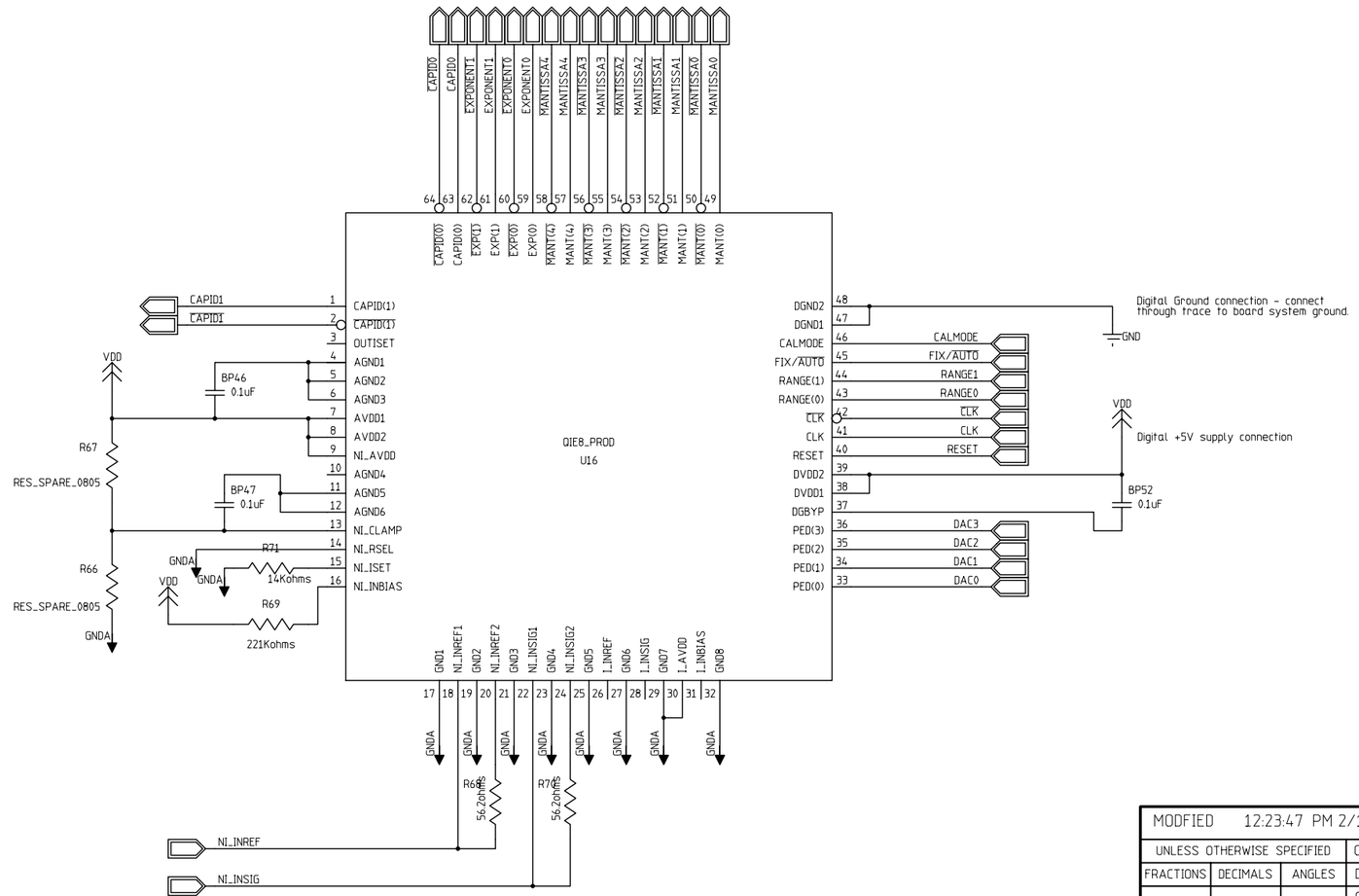

NI_INREF/NI_INSIG
use 56 ohm serial resistor on second input pin for 50 ohm inputs
use 110 ohm serial resistor on second input pin for 93 ohm inputs

MODFIED 12:23:47 PM 2/17/2004				
UNLESS OTHERWISE SPECIFIED			ORIGINATOR	
FRACTIONS	DECIMALS	ANGLES	DRAWN	
			CHECKED	
			APPROVED	

1. BREAK ALL SHARP EDGES 1/64 MAX.
2. DO NOT SCALE DWG.
3. DIMENSIONING IN ACCORD WITH ANSI Y14.5 STD's.

MAX. ALL MACHINED SURFACES

USED ON

MATERIAL

Fermi National Accelerator Laboratory
United States Department of Energy

D:\QIE_PRODUCTION\Prod_QIE_PMT\Prod_QIE_PMT.prj

SIZE	SCALE	FILMED	DRAWING NUMBER	PAGE 01 of 01	REV
C	1:1				

H=4ND; V=4LA

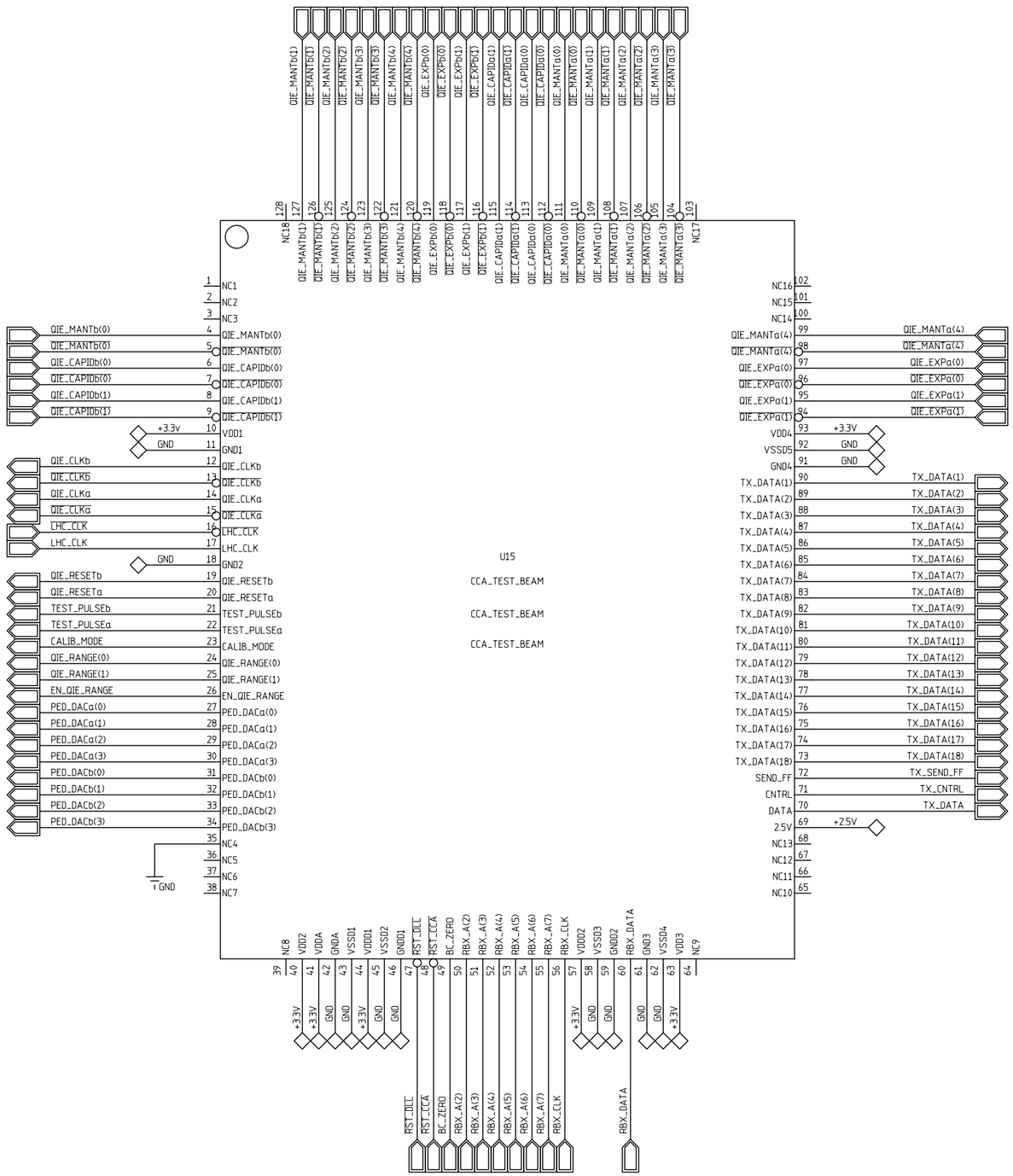

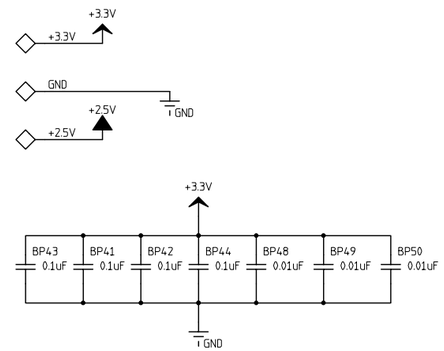

MODIFIED 9:50:13 AM 3/13/2002				
UNLESS OTHERWISE SPECIFIED			ORIGINATOR	
FRACTIONS	DECIMALS	ANGLES	DRAWN	
			CHECKED	
			APPROVED	

1. BREAK ALL SHARP EDGES 1/64 MAX.
2. DO NOT SCALE DWG.
3. DIMENSIONING IN ACCORD WITH ANSI Y14.5 STD's.

MAX. ALL MACHINED SURFACES

USED ON

MATERIAL

Fermi National Accelerator Laboratory
United States Department of Energy

D:\QIE_PRODUCTION\Prod_QIE_PMT\Prod_QIE_PMT.prj

SIZE	SCALE	FILMED	DRAWING NUMBER	PAGE 01 of 01	REV
C	1:1				

H=4ND; V=4LA

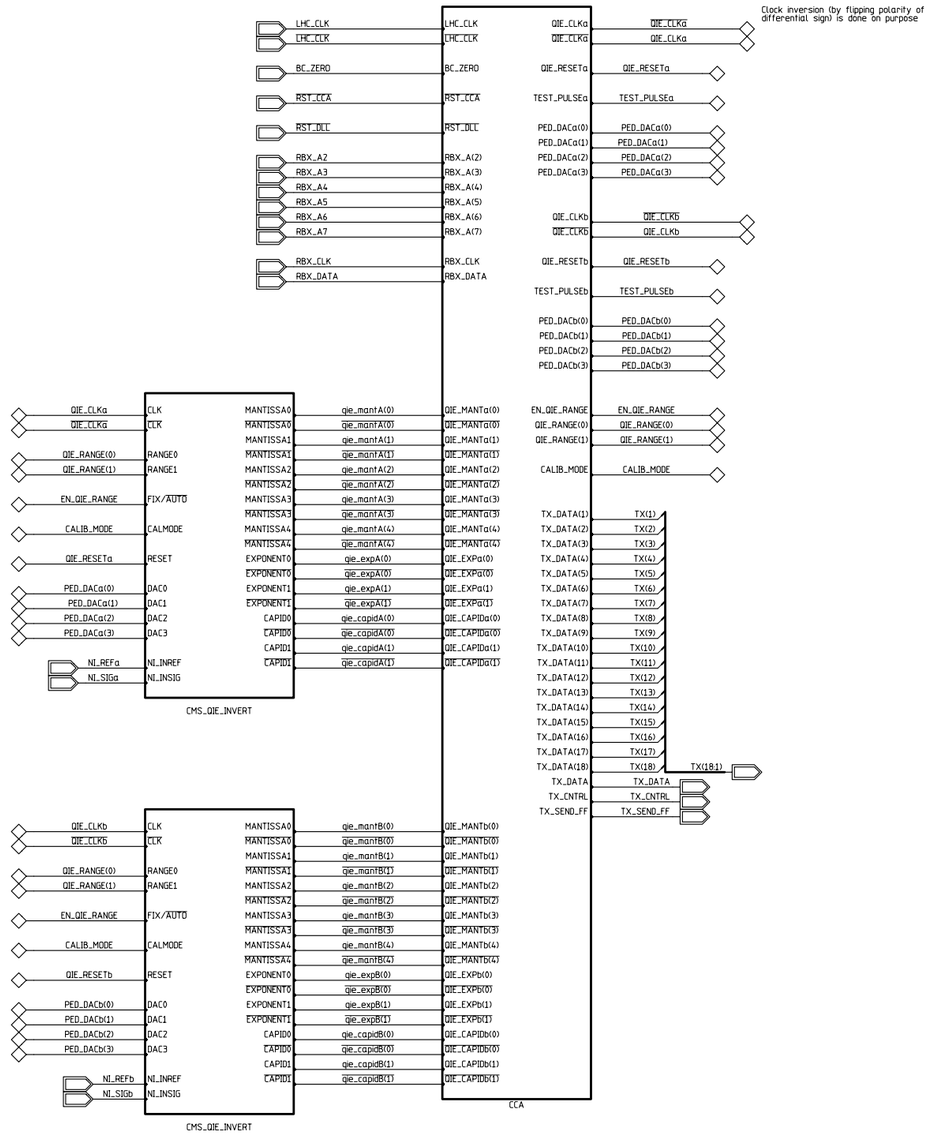

MODFIED 2:43:50 PM 11/19/2002			
UNLESS OTHERWISE SPECIFIED		ORIGINATOR	
FRACTIONS	DECIMALS	ANGLES	DRAWN
			CHECKED
			APPROVED

1. BREAK ALL SHARP EDGES 1/64 MAX.
2. DO NOT SCALE DWG.
3. DIMENSIONING IN ACCORD WITH ANSI Y14.5 STD's.

MAX. ALL MACHINED SURFACES

USED ON

MATERIAL

Fermi National Accelerator Laboratory
United States Department of Energy

D:\QIE_PRODUCTION\Prod_QIE_PMT\Prod_QIE_PMT.prj

SIZE	SCALE	FILMED	DRAWING NUMBER	PAGE 01 of 01	REV
D	1:1				A

H=BND; V=4LA

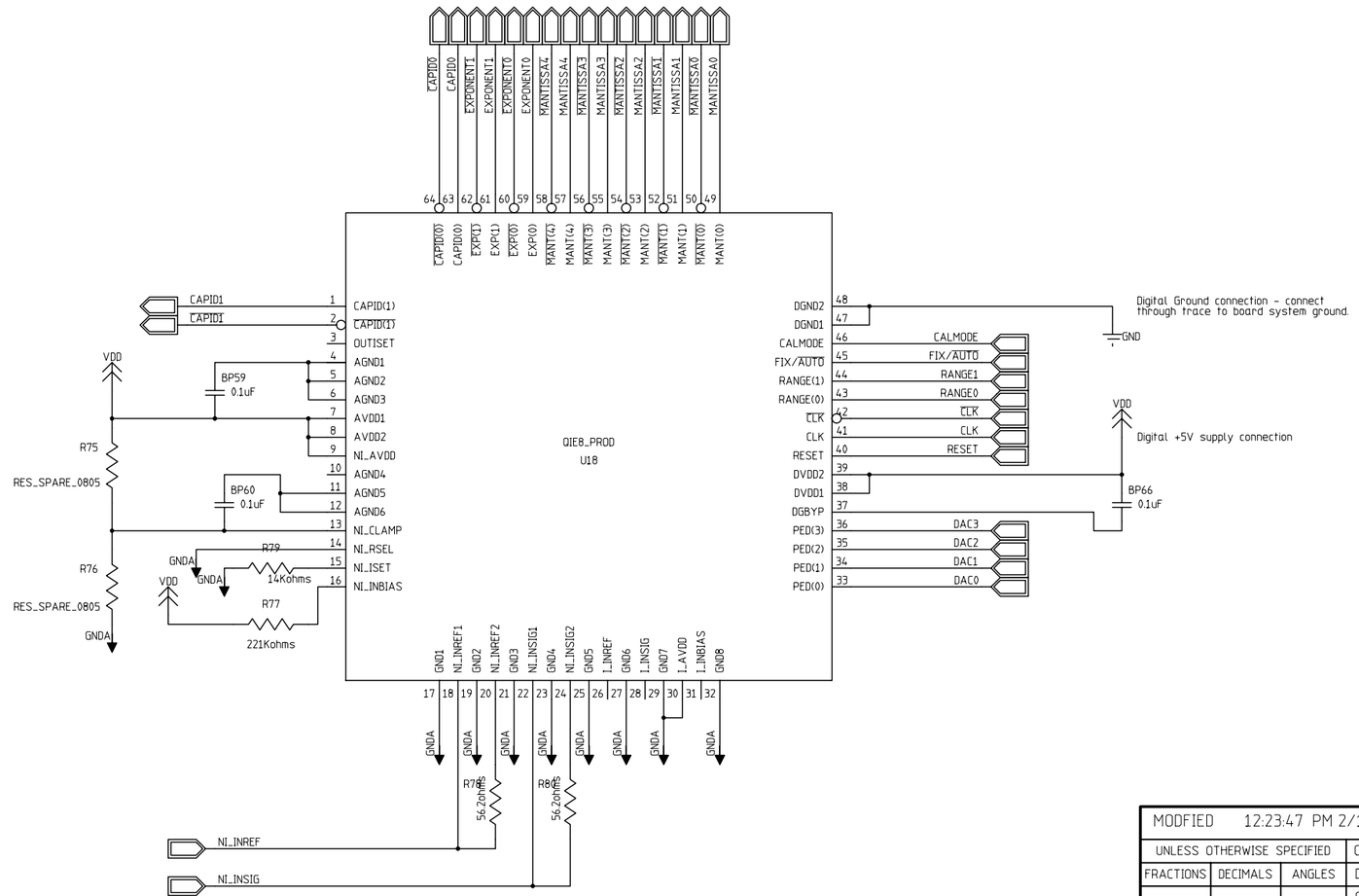

NI_INREF/NI_INSIG
use 56 ohm serial resistor on second input pin for 50 ohm inputs
use 110 ohm serial resistor on second input pin for 93 ohm inputs

MODFIED 12:23:47 PM 2/17/2004				
UNLESS OTHERWISE SPECIFIED			ORIGINATOR	
FRACTIONS	DECIMALS	ANGLES	DRAWN	
			CHECKED	
1. BREAK ALL SHARP EDGES 1/64 MAX.			APPROVED	
2. DO NOT SCALE DWG.			USED ON	
3. DIMENSIONING IN ACCORD WITH ANSI Y14.5 STD's.			MATERIAL	
MAX. ALL MACHINED SURFACES				

Fermi National Accelerator Laboratory
United States Department of Energy

D:\QIE_PRODUCTION\Prod_QIE_PMT\Prod_QIE_PMT.prj

SIZE	SCALE	FILMED	DRAWING NUMBER	PAGE 01 of 01	REV
C	1:1				

H=4ND; V=4LA

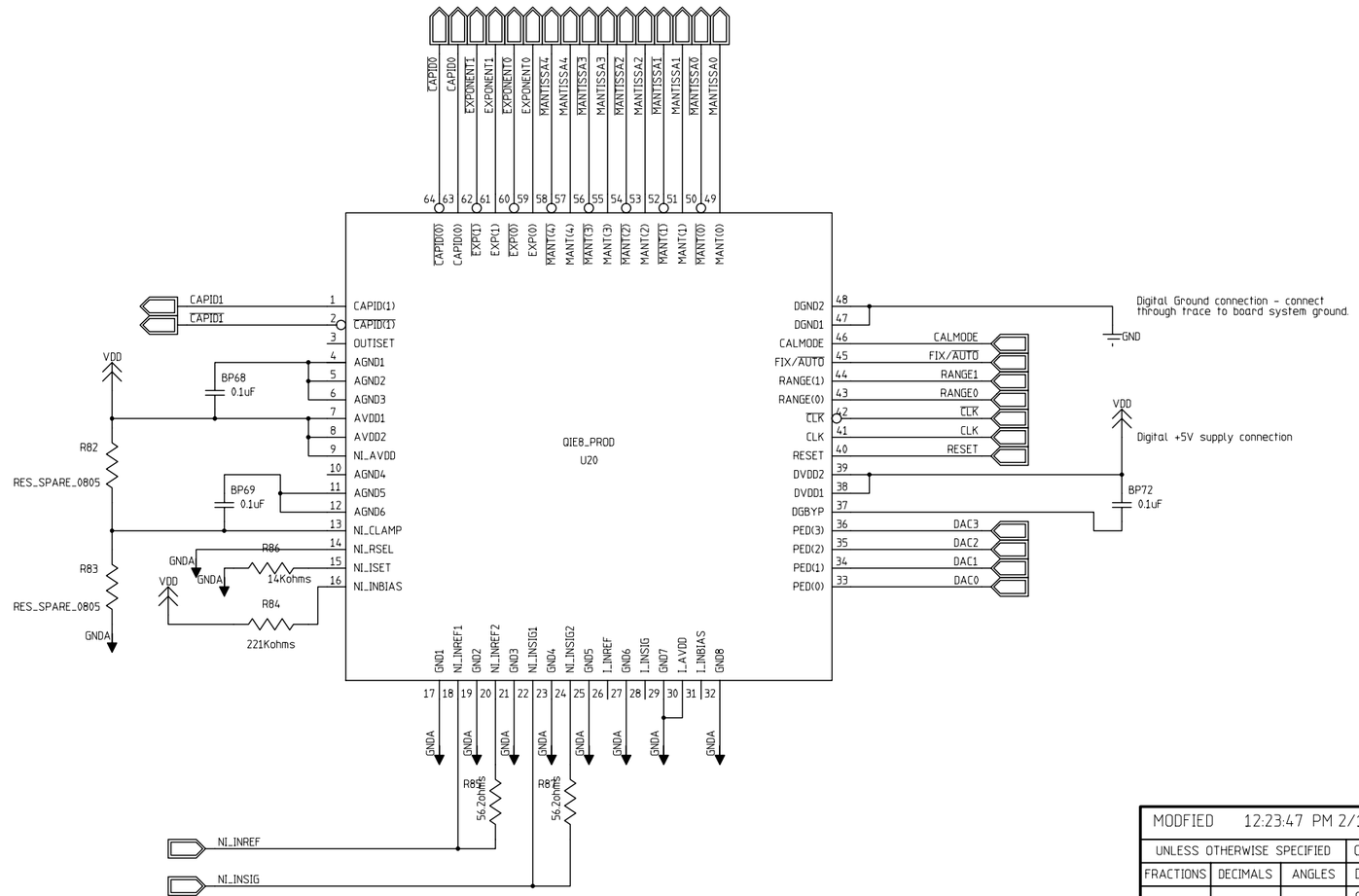

NI_INREF/NI_INSIG
use 56 ohm serial resistor on second input pin for 50 ohm inputs
use 110 ohm serial resistor on second input pin for 93 ohm inputs

MODFIED 12:23:47 PM 2/17/2004				
UNLESS OTHERWISE SPECIFIED			ORIGINATOR	
FRACTIONS	DECIMALS	ANGLES	DRAWN	
			CHECKED	
1. BREAK ALL SHARP EDGES 1/64 MAX.			APPROVED	
2. DO NOT SCALE DWG.			USED ON	
3. DIMENSIONING IN ACCORD WITH ANSI Y14.5 STD's.			MATERIAL	
MAX. ALL MACHINED SURFACES				

Fermi National Accelerator Laboratory
United States Department of Energy

D:\QIE_PRODUCTION\Prod_QIE_PMT\Prod_QIE_PMT.prj

SIZE	SCALE	FILMED	DRAWING NUMBER	PAGE 01 of 01	REV
C	1:1				

H=4ND; V=4LA

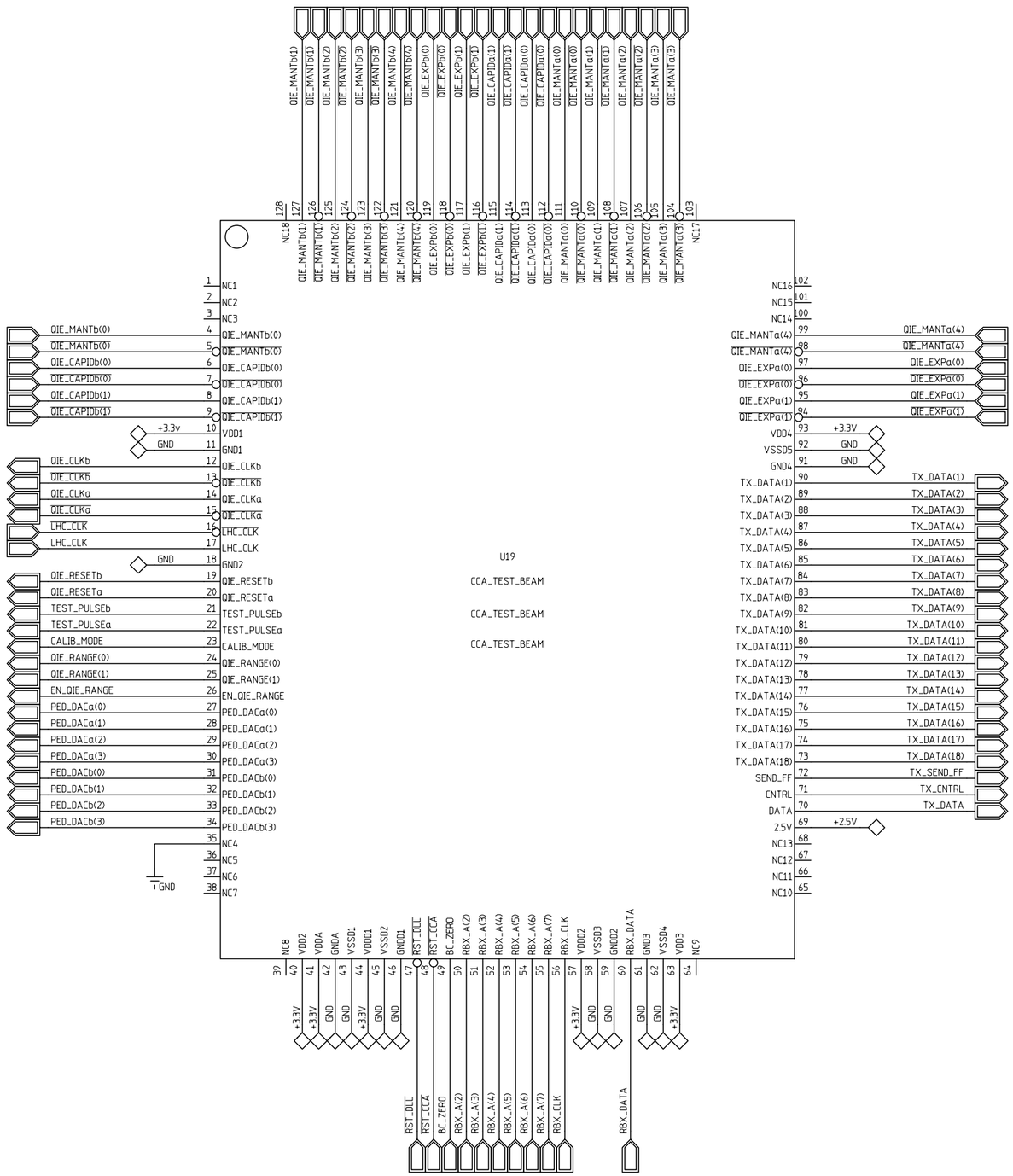

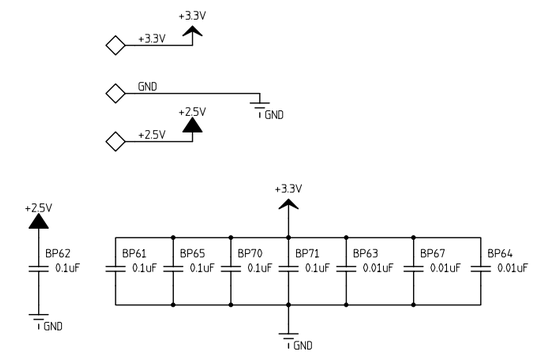

MODIFIED 9:50:13 AM 3/13/2002				
UNLESS OTHERWISE SPECIFIED			ORIGINATOR	
FRACTIONS	DECIMALS	ANGLES	DRAWN	
			CHECKED	
			APPROVED	

1. BREAK ALL SHARP EDGES 1/64 MAX.
2. DO NOT SCALE DWG.
3. DIMENSIONING IN ACCORD WITH ANSI Y14.5 STD's.

MAX. ALL MACHINED SURFACES

USED ON

MATERIAL

Fermi National Accelerator Laboratory
United States Department of Energy

D:\QIE_PRODUCTION\Prod_QIE_PMT\Prod_QIE_PMT.prj

SIZE	SCALE	FILMED	DRAWING NUMBER	PAGE 01 of 01	REV
C	1:1				

H=4ND; V=4LA