07/08/2003 TMS Create signal TX_1_SEND_IDLE and TX_3_SEND_IDLE.
This mod adds an inverter chip and allows us to send IDLE patterns during abort gap.

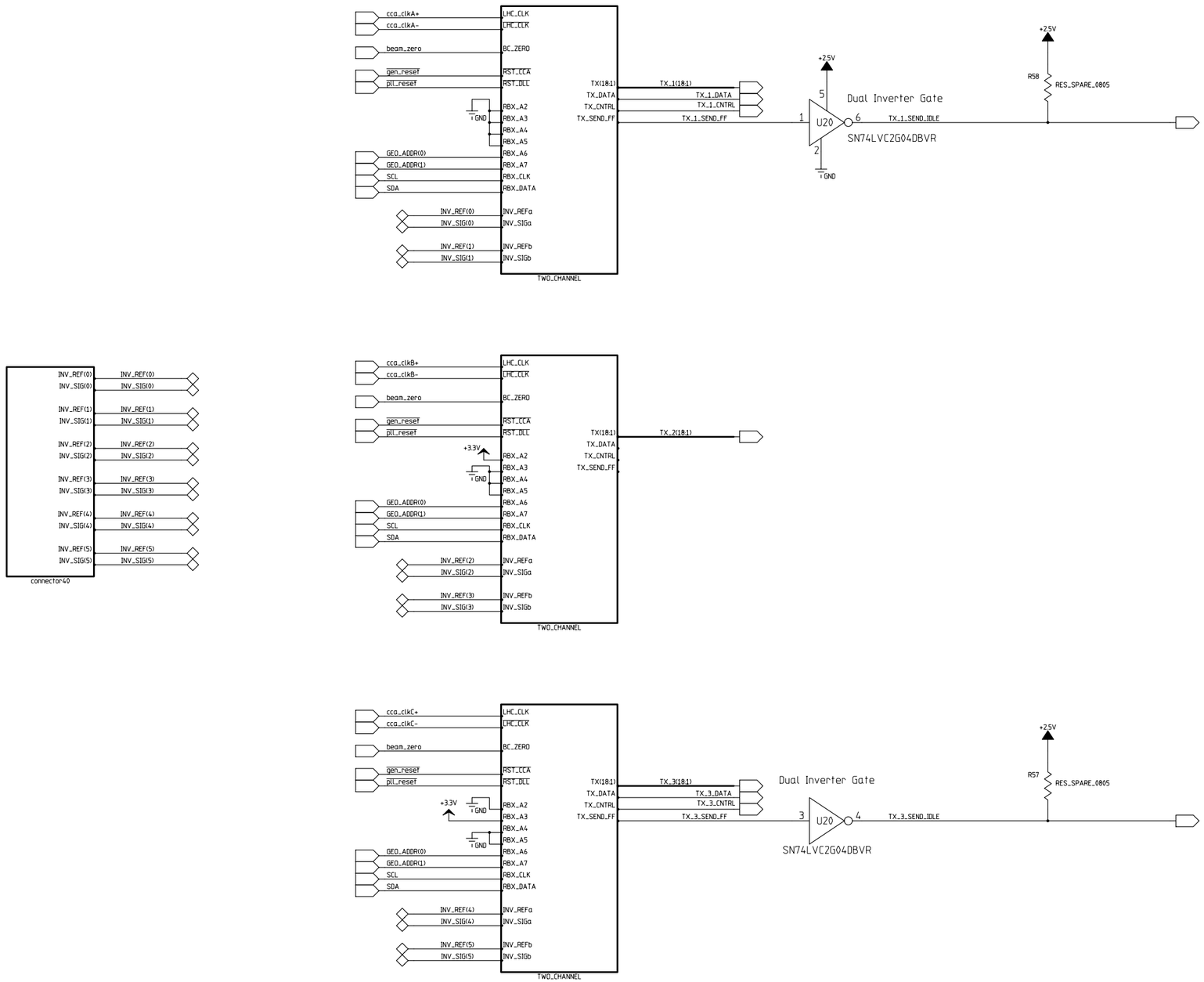

MODFIED 1:38:42 PM 10/21/2003					
UNLESS OTHERWISE SPECIFIED			ORIGINATOR	Theresa M. Shaw	
FRACTIONS	DECIMALS	ANGLES	DRAWN		
			CHECKED		
1. BREAK ALL SHARP EDGES 1/64 MAX.			APPROVED		
2. DO NOT SCALE DWG.			USED ON		
3. DIMENSIONING IN ACCORD WITH ANSI Y14.5 STD's.			MATERIAL		
MAX. ALL MACHINED SURFACES					

Fermi National Accelerator Laboratory
United States Department of Energy

D:\QIE_PRODUCTION\Prod_QIE_HPD\Prod_QIE_HPD.prj

CMS HCAL HPD FRONT END MODULE
Top Level Schematic

SIZE	SCALE	FILMED	DRAWING NUMBER	PAGE 01 of 04	REV
D	1:1				A

H=8ND, V=4LA

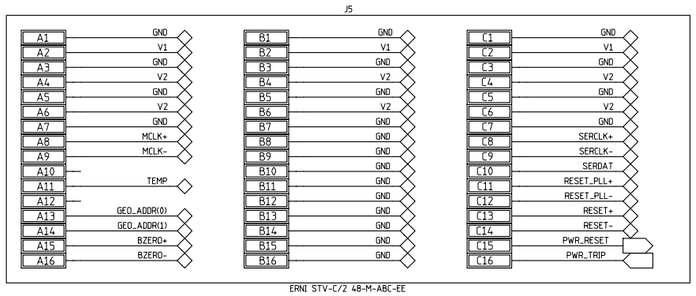

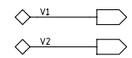

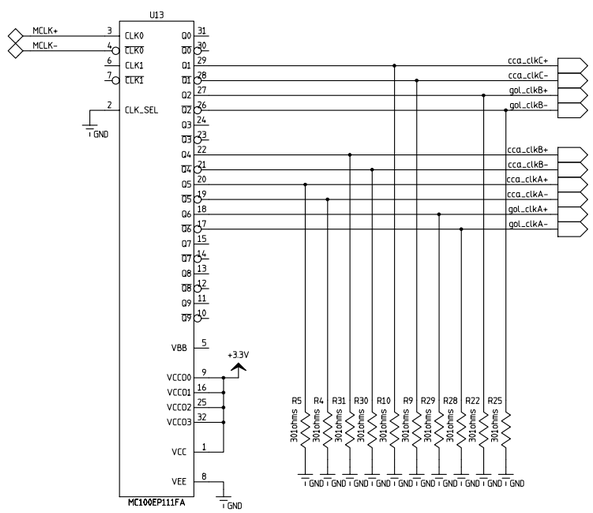

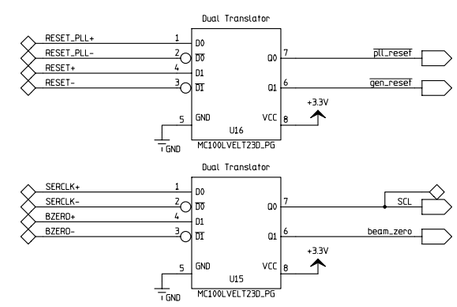

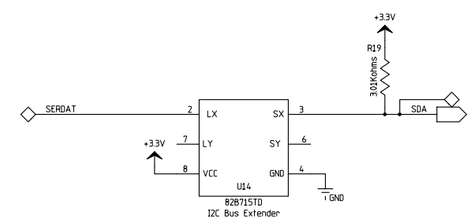

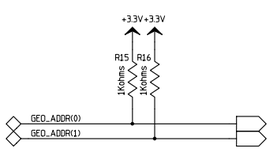

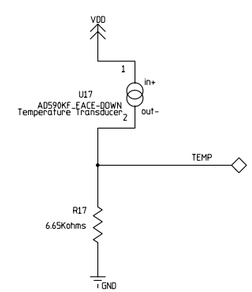

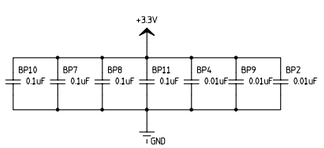

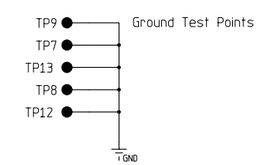

MODFIED 9:02:34 AM 10/29/2003				
UNLESS OTHERWISE SPECIFIED			ORIGINATOR	Theresa M. Shaw
FRACTIONS	DECIMALS	ANGLES	DRAWN	
			CHECKED	
1. BREAK ALL SHARP EDGES 1/64 MAX. 2. DO NOT SCALE DWG. 3. DIMENSIONING IN ACCORD WITH ANSI Y14.5 STD's. MAX. ALL MACHINED SURFACES			APPROVED	
			USED ON	
			MATERIAL	

Fermi National Accelerator Laboratory
United States Department of Energy

D:\QIE_PRODUCTION\Prod_QIE_HPD\Prod_QIE_HPD.prj

CMS HCAL HPD FRONT END MODULE Backplane Connections

SIZE	SCALE	FILMED	DRAWING NUMBER	PAGE 02 of 04	REV
D	1:1				A

H=8ND, V=4LA

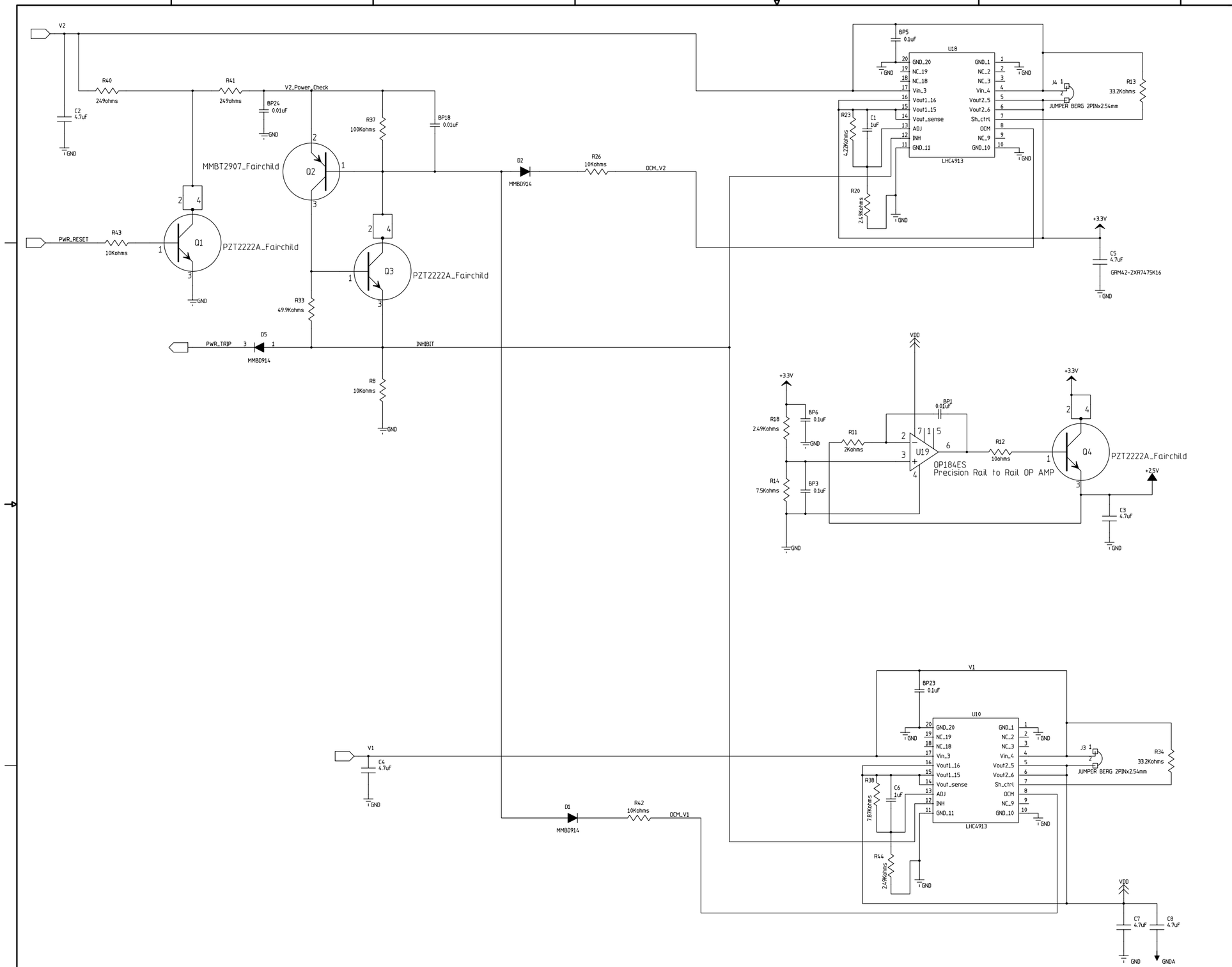

MODFIED 9:02:34 AM 10/29/2003				
UNLESS OTHERWISE SPECIFIED			ORIGINATOR	Theresa M. Shaw
FRACTIONS	DECIMALS	ANGLES	DRAWN	
			CHECKED	
			APPROVED	

1. BREAK ALL SHARP EDGES 1/64 MAX.
2. DO NOT SCALE DWG.
3. DIMENSIONING IN ACCORD WITH ANSI Y14.5 STD's.

√ MAX. ALL MACHINED SURFACES

USED ON

MATERIAL

Fermi National Accelerator Laboratory
United States Department of Energy

D:\QIE_PRODUCTION\Prod_QIE_HPD\Prod_QIE_HPD.prj

CMS HCAL HPD FRONT END MODULE
Power Control Circuitry

SIZE	SCALE	FILMED	DRAWING NUMBER	PAGE 03 of 04	REV
D	1:1				A

H=BND. V=4LA

07/08/2003 TMS Ground GOL signals FLAG(1:0) and FORCE_FF0 upon advice of Paulo M.

07/08/2003 TMS Create signal TX_1_SEND_IDLE and TX_3_SEND_IDLE.
This mod adds an inverter chip and allows us to send IDLE patterns during abort gap.

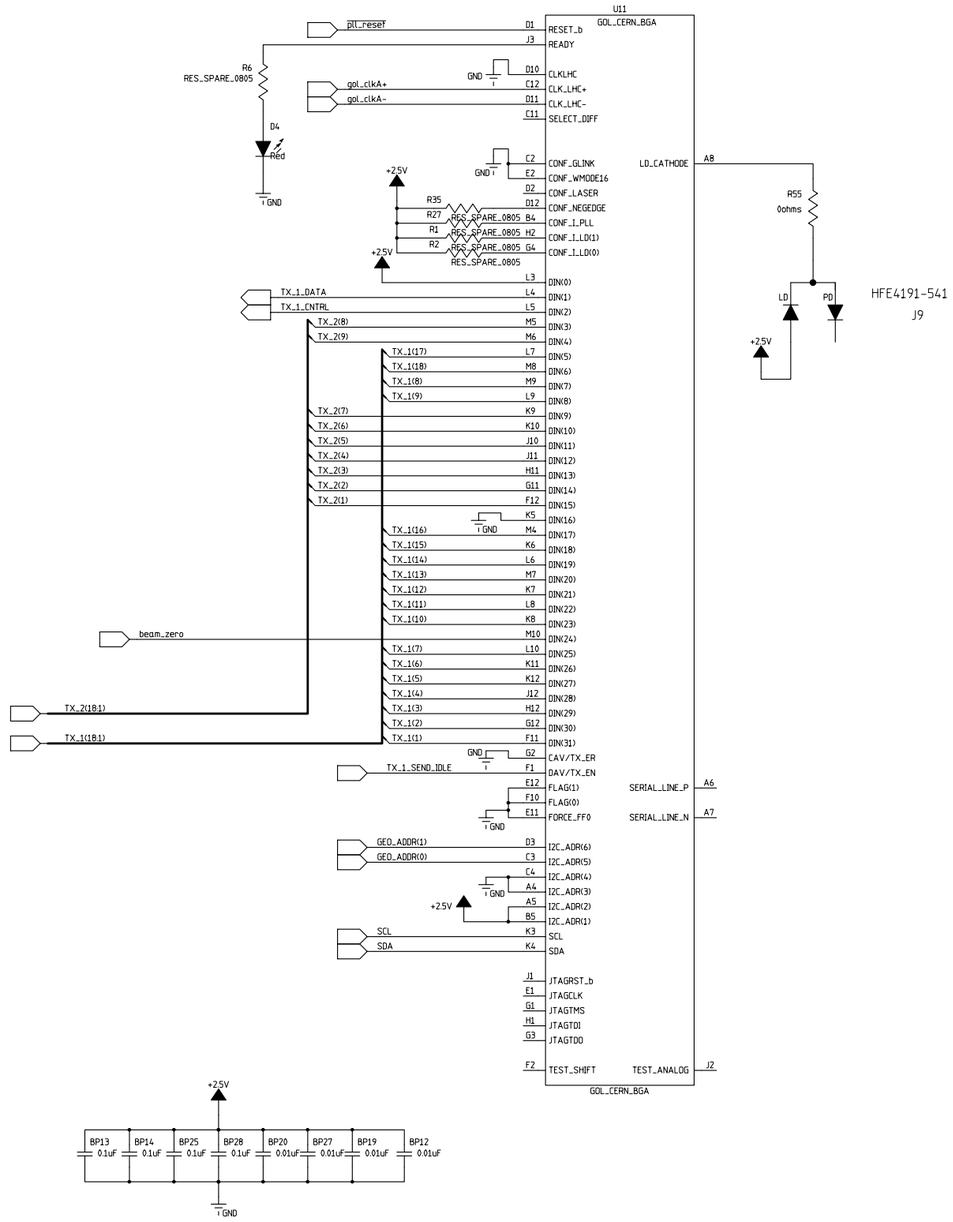

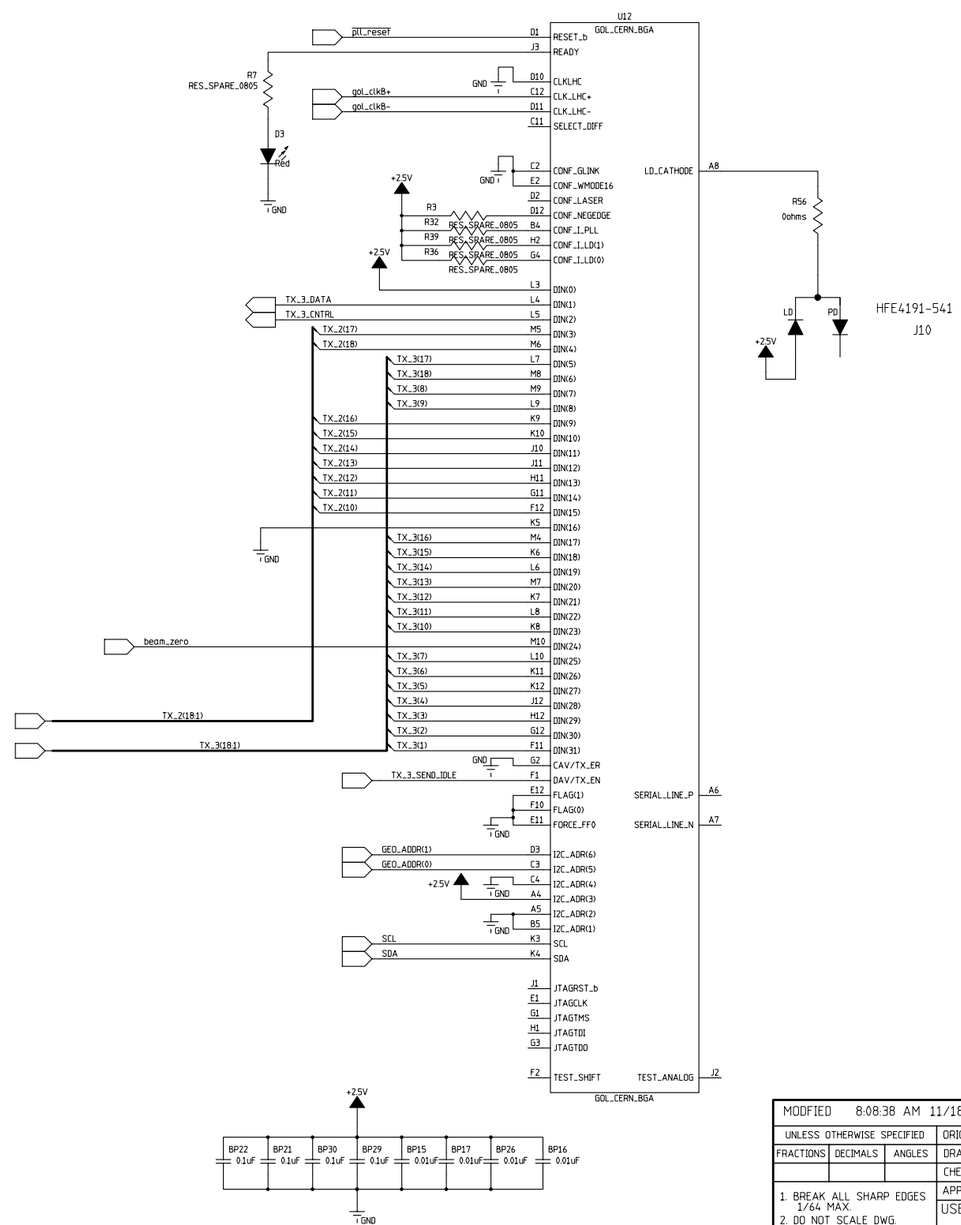

MODFIED 8:08:38 AM 11/18/2003				
UNLESS OTHERWISE SPECIFIED			ORIGINATOR	Theresa M. Shaw
FRACTIONS	DECIMALS	ANGLES	DRAWN	
			CHECKED	
			APPROVED	

1. BREAK ALL SHARP EDGES 1/64 MAX.
2. DO NOT SCALE DWG.
3. DIMENSIONING IN ACCORD WITH ANSI Y14.5 STD's.

MAX. ALL MACHINED SURFACES

USED ON

MATERIAL

Fermi National Accelerator Laboratory
United States Department of Energy

D:\QIE_PRODUCTION\Prod_QIE_HPD\Prod_QIE_HPD.prj

CMS HCAL HPD FRONT END MODULE
Gigabit Optical Links and VCSEL Drivers

SIZE	SCALE	FILMED	DRAWING NUMBER	PAGE 04 of 04	REV
D	1:1				A

H=BND; V=4LA

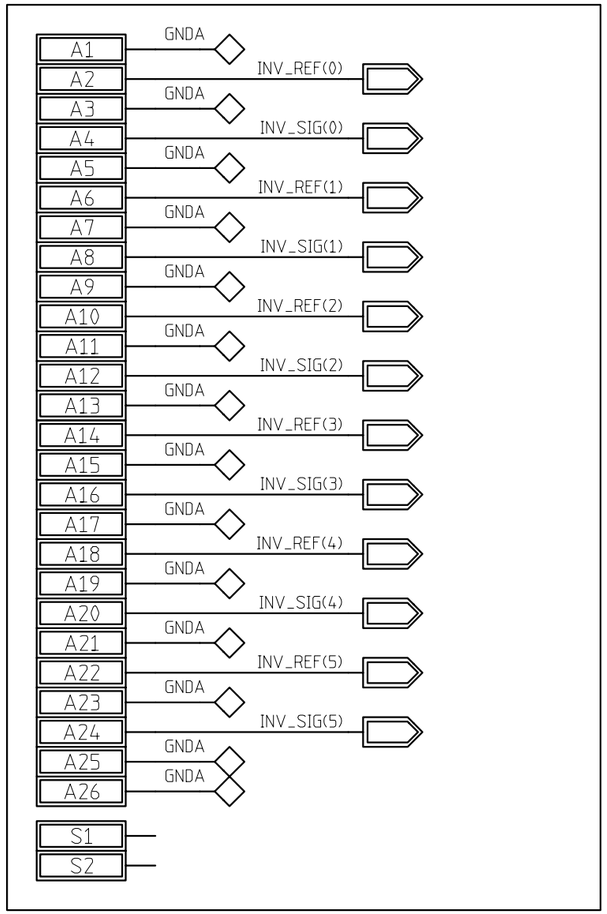

J2
OMRON XF2H-2615-1

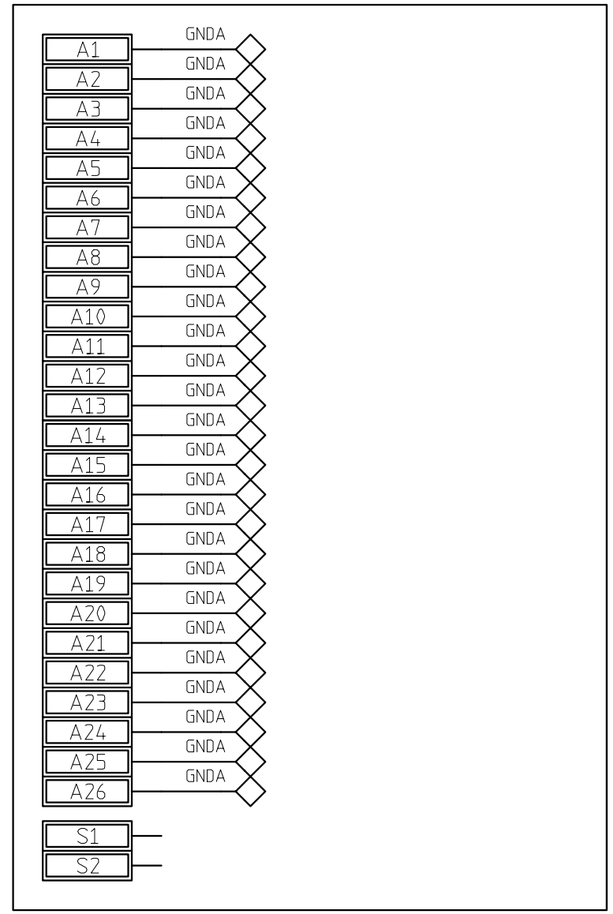

J8
OMRON XF2H-2615-1

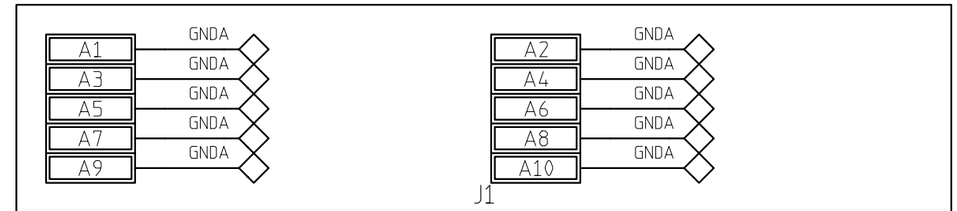

3m 151210-7422-TB

Mounting Holes which are able to be connected to ground planes and chassis.

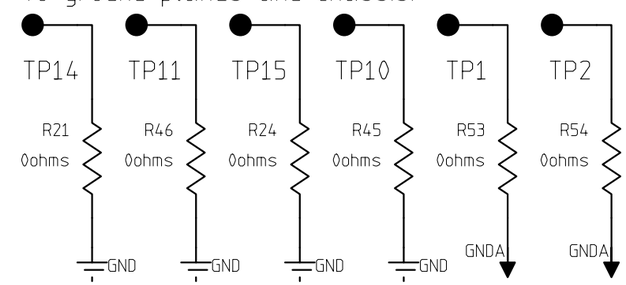

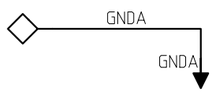

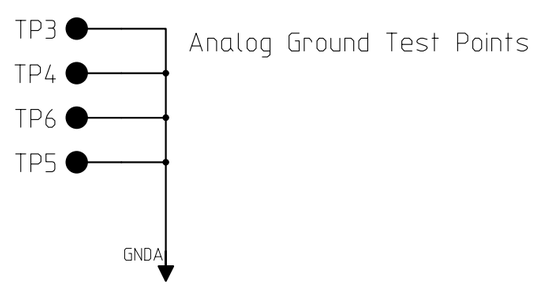

Analog Ground Test Points

MODFIED 1:28:48 PM 10/21/2003					
UNLESS OTHERWISE SPECIFIED			ORIGINATOR	Theresa M. Shaw	
FRACTIONS	DECIMALS	ANGLES	DRAWN		
			CHECKED		
1. BREAK ALL SHARP EDGES 1/64 MAX. 2. DO NOT SCALE DWG. 3. DIMENSIONING IN ACCORD WITH ANSI Y14.5 STD's. √ MAX. ALL MACHINED SURFACES			APPROVED		
			USED ON		
			MATERIAL		

Fermi National Accelerator Laboratory
United States Department of Energy

D:\QIE_PRODUCTION\Prod_QIE_HPD\Prod_QIE_HPD.prj

CMS HCAL HPD FRONT END MODULE Analog Signal Connector

SIZE	SCALE	FILMED	DRAWING NUMBER	PAGE 01 of 01	REV
B	1:1				

H=2LA; V=2LA

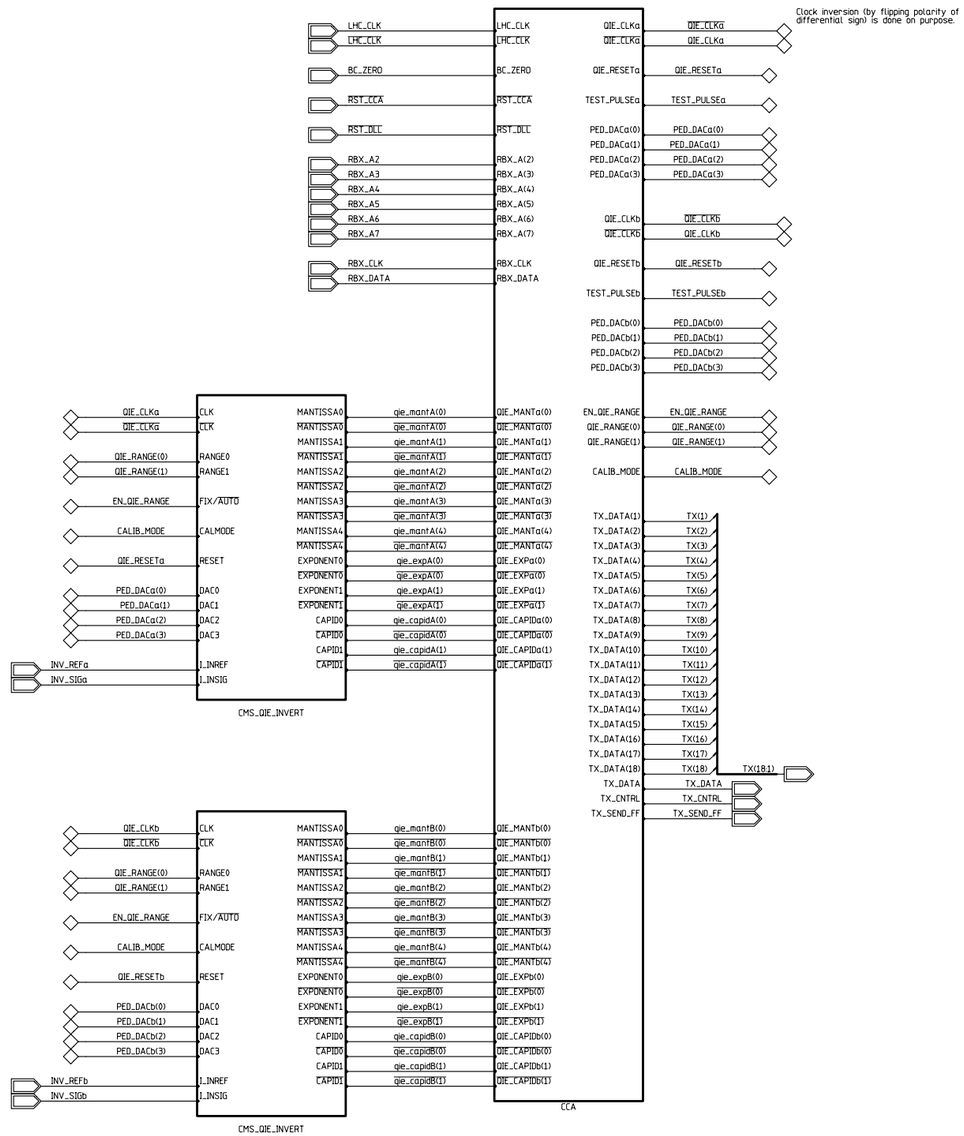

MODIFIED 1:14:33 PM 10/21/2003					
UNLESS OTHERWISE SPECIFIED			ORIGINATOR	Theresa M. Shaw	
FRACTIONS	DECIMALS	ANGLES	DRAWN		
			CHECKED		
1. BREAK ALL SHARP EDGES 1/64 MAX. 2. DO NOT SCALE DWG. 3. DIMENSIONING IN ACCORD WITH ANSI Y14.5 STD's. √ MAX. ALL MACHINED SURFACES			APPROVED		
			USED ON		
			MATERIAL		

Fermi National Accelerator Laboratory
United States Department of Energy

D:\QIE_PRODUCTION\Prod_QIE_HPD\Prod_QIE_HPD.prj

CMS HCAL HPD FRONT END MODULE
QIE to CCA Block

SIZE	SCALE	FILMED	DRAWING NUMBER	PAGE 01 of 01	REV
D	1:1				A

H=BND; V=4LA

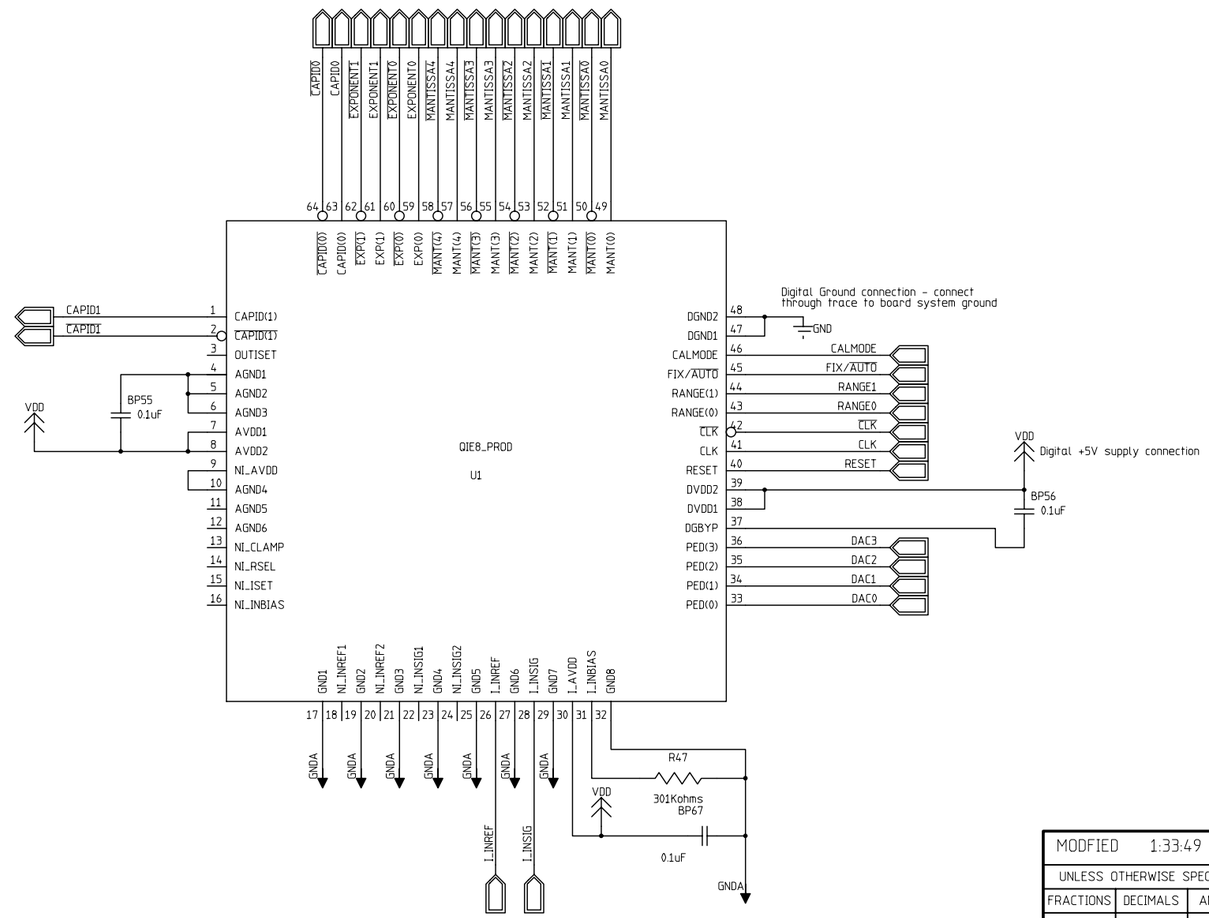

MODIFIED 1:33:49 PM 10/21/2003			
UNLESS OTHERWISE SPECIFIED		ORIGINATOR	Theresa M. Shaw
FRACTIONS	DECIMALS	ANGLES	DRAWN
			CHECKED
			APPROVED

1. BREAK ALL SHARP EDGES 1/64 MAX.
2. DO NOT SCALE DWG.
3. DIMENSIONING IN ACCORD WITH ANSI Y14.5 STD's.

√ MAX. ALL MACHINED SURFACES

USED ON

MATERIAL

Fermi National Accelerator Laboratory
United States Department of Energy

D:\QIE_PRODUCTION\Prod_QIE_HPD\Prod_QIE_HPD.prj

CMS HCAL HPD FRONT END MODULE
Charge Integrating Encoder ASIC (QIE)

SIZE	SCALE	FILMED	DRAWING NUMBER	PAGE 01 of 01	REV
C	1:1				

H=4ND; V=4LA

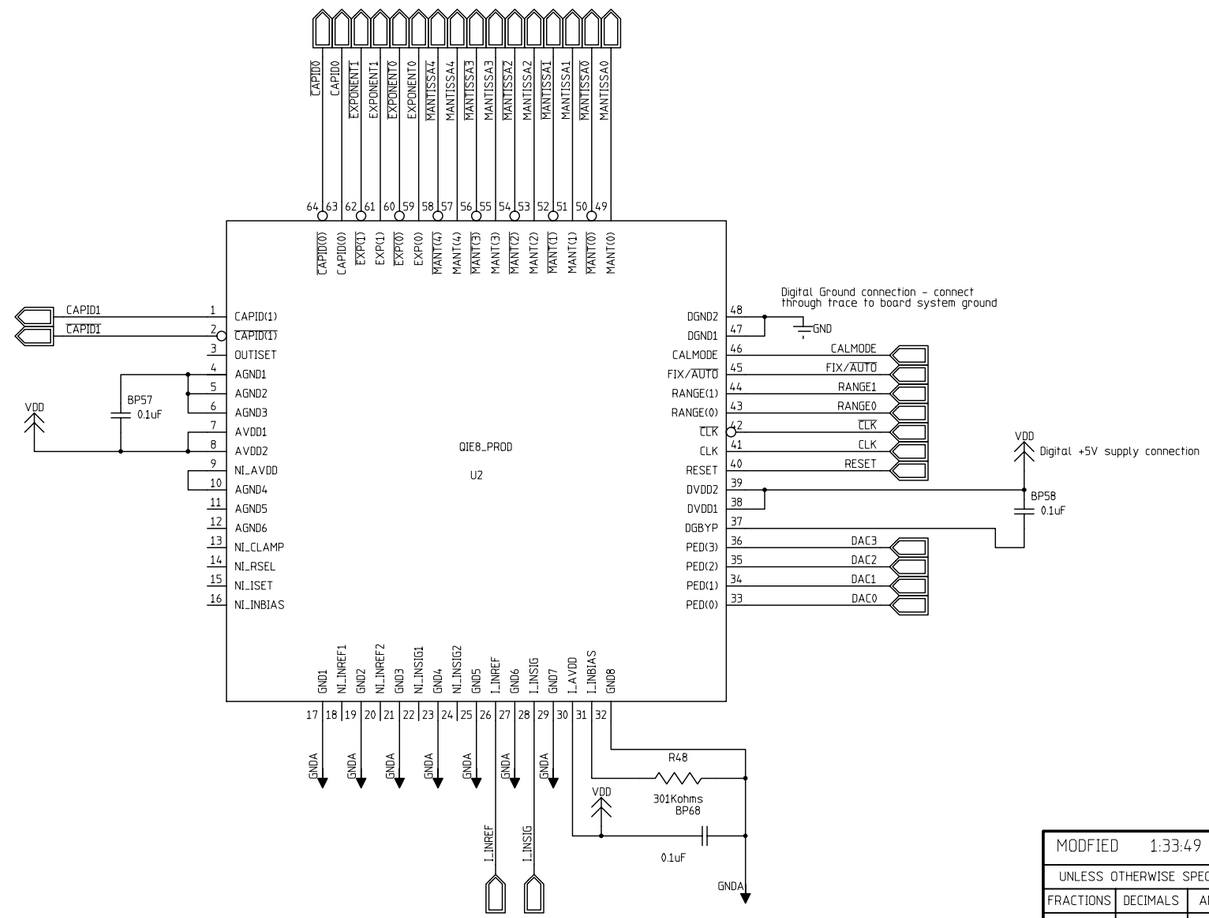

MODIFIED 1:33:49 PM 10/21/2003			
UNLESS OTHERWISE SPECIFIED		ORIGINATOR	Theresa M. Shaw
FRACTIONS	DECIMALS	ANGLES	DRAWN
			CHECKED
			APPROVED

1. BREAK ALL SHARP EDGES 1/64 MAX.
2. DO NOT SCALE DWG.
3. DIMENSIONING IN ACCORD WITH ANSI Y14.5 STD's.

√ MAX. ALL MACHINED SURFACES

USED ON

MATERIAL

Fermi National Accelerator Laboratory
United States Department of Energy

D:\QIE_PRODUCTION\Prod_QIE_HPD\Prod_QIE_HPD.prj

CMS HCAL HPD FRONT END MODULE
Charge Integrating Encoder ASIC (QIE)

SIZE	SCALE	FILMED	DRAWING NUMBER	PAGE 01 of 01	REV
C	1:1				

H=4ND; V=4LA

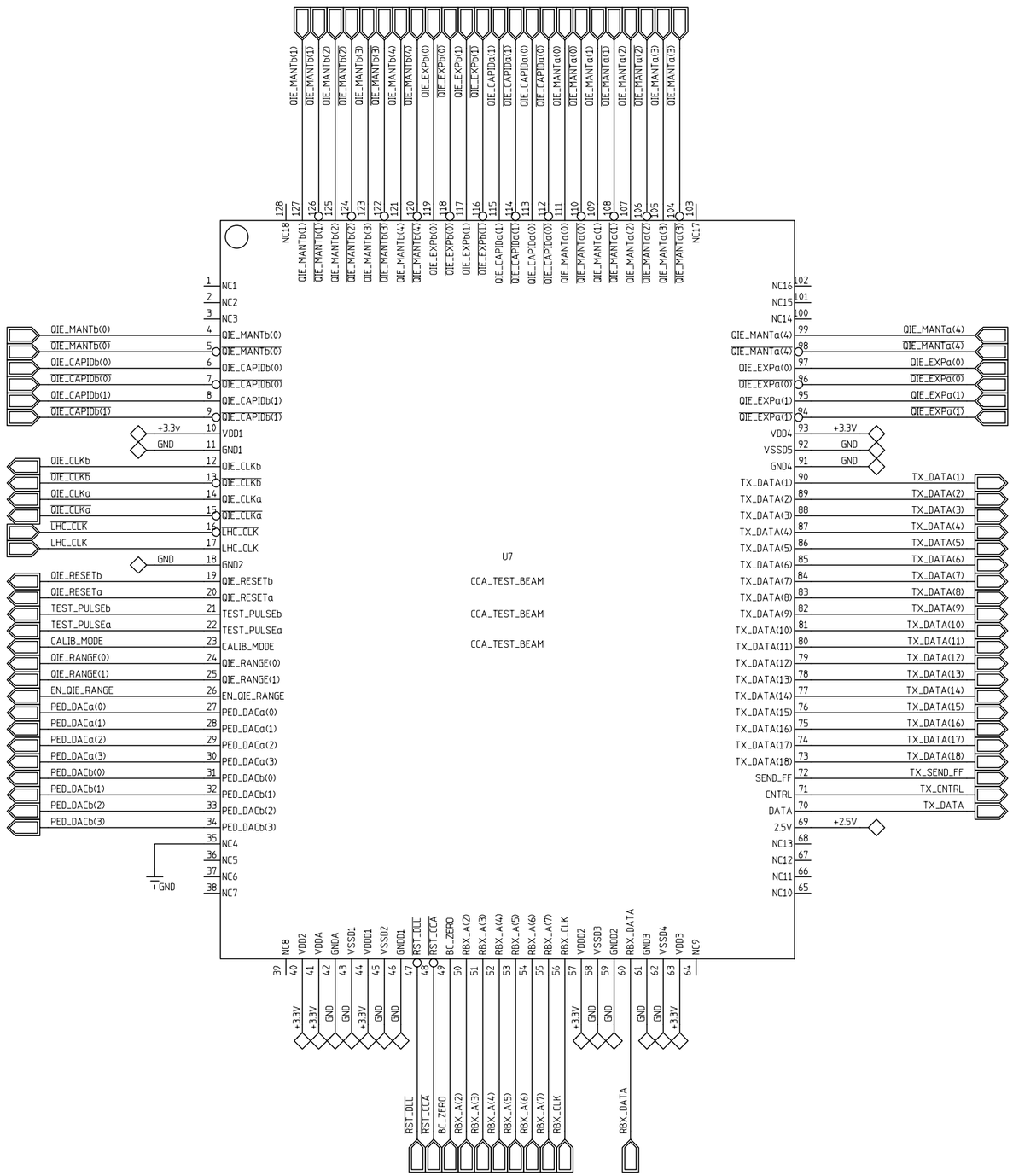

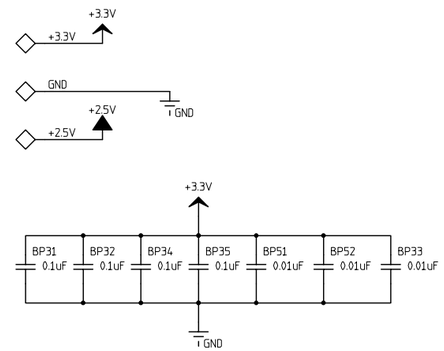

MODIFIED 1:15:33 PM 10/21/2003				
UNLESS OTHERWISE SPECIFIED			ORIGINATOR	Theresa M. Shaw
FRACTIONS	DECIMALS	ANGLES	DRAWN	
			CHECKED	
1. BREAK ALL SHARP EDGES 1/64 MAX.			APPROVED	
2. DO NOT SCALE DWG.			USED ON	
3. DIMENSIONING IN ACCORD WITH ANSI Y14.5 STD's.				
MAX. ALL MACHINED SURFACES			MATERIAL	

Fermi National Accelerator Laboratory
United States Department of Energy

D:\QIE_PRODUCTION\Prod_QIE_HPD\Prod_QIE_HPD.prj

CMS HCAL HPD FRONT END MODULE
Channel Control ASIC (CCA)

SIZE	SCALE	FILMED	DRAWING NUMBER	PAGE 01 of 01	REV
C	1:1				

H=4ND; V=4LA

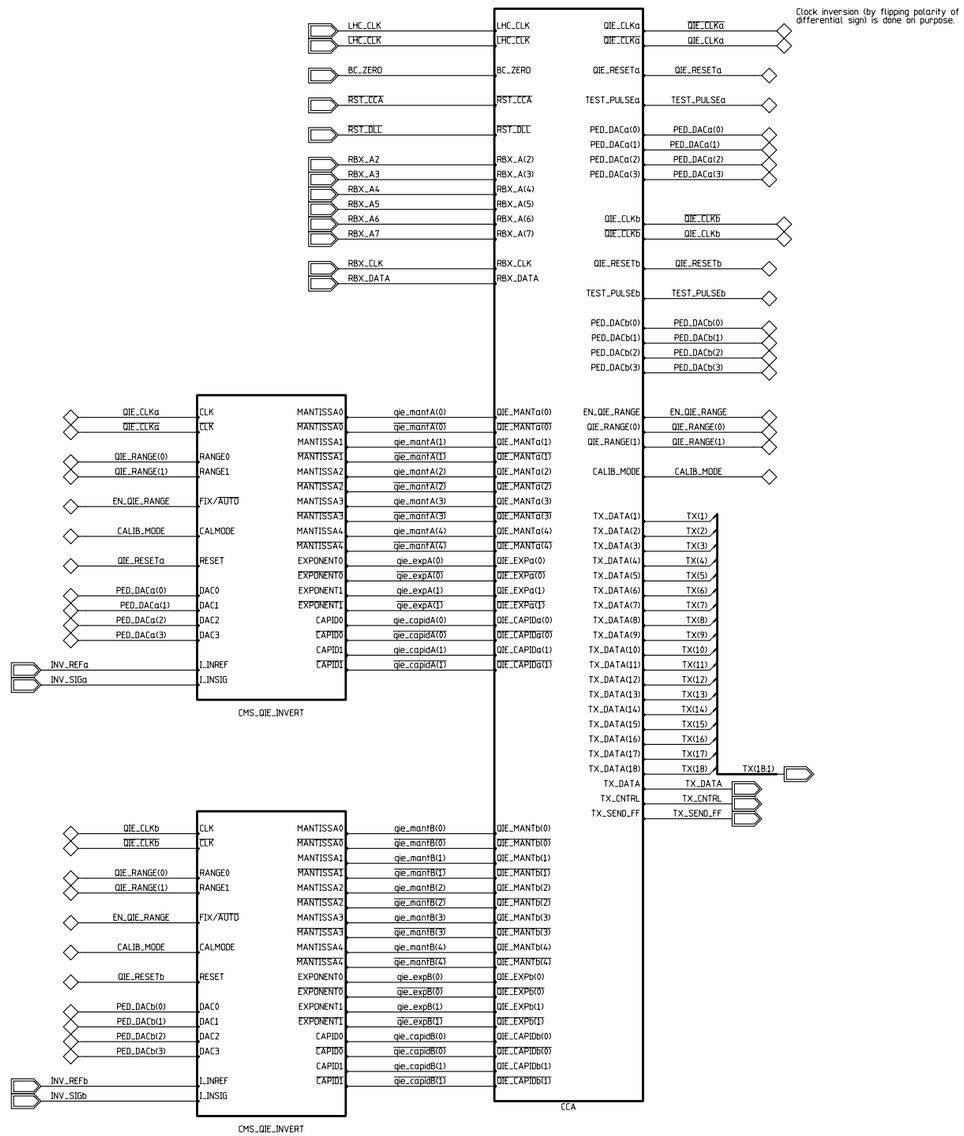

MODIFIED 1:14:33 PM 10/21/2003					
UNLESS OTHERWISE SPECIFIED			ORIGINATOR	Theresa M. Shaw	
FRACTIONS	DECIMALS	ANGLES	DRAWN		
			CHECKED		
1. BREAK ALL SHARP EDGES 1/64 MAX. 2. DO NOT SCALE DWG. 3. DIMENSIONING IN ACCORD WITH ANSI Y14.5 STD's. √ MAX. ALL MACHINED SURFACES			APPROVED		
			USED ON		
			MATERIAL		

Fermi National Accelerator Laboratory
United States Department of Energy

D:\QIE_PRODUCTION\Prod_QIE_HPD\Prod_QIE_HPD.prj

CMS HCAL HPD FRONT END MODULE
QIE to CCA Block

SIZE	SCALE	FILMED	DRAWING NUMBER	PAGE 01 of 01	REV
D	1:1				A

H=BND; V=4LA

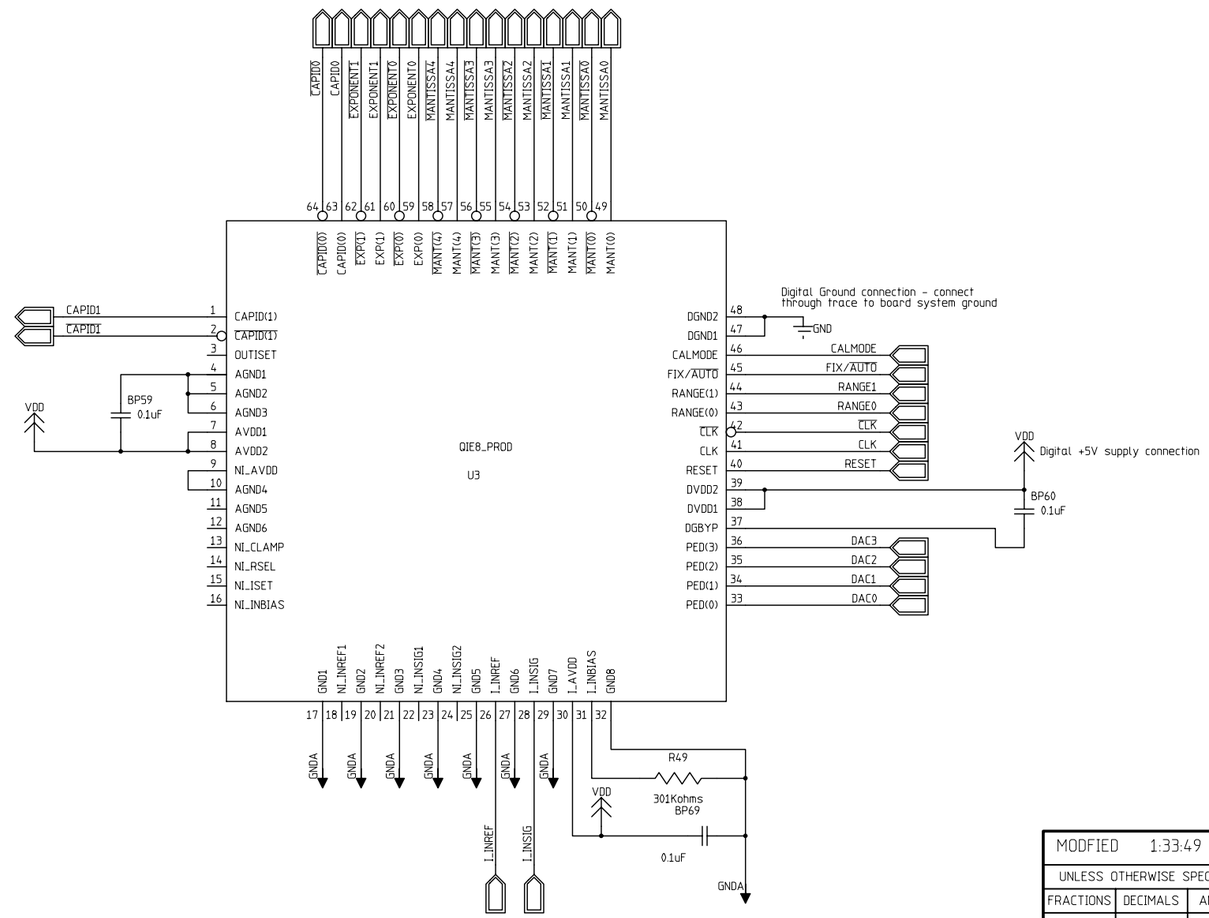

MODIFIED 1:33:49 PM 10/21/2003				
UNLESS OTHERWISE SPECIFIED			ORIGINATOR	Theresa M. Shaw
FRACTIONS	DECIMALS	ANGLES	DRAWN	
			CHECKED	
			APPROVED	

1. BREAK ALL SHARP EDGES 1/64 MAX.
2. DO NOT SCALE DWG.
3. DIMENSIONING IN ACCORD WITH ANSI Y14.5 STD's.

√ MAX. ALL MACHINED SURFACES

USED ON

MATERIAL

Fermi National Accelerator Laboratory
United States Department of Energy

D:\QIE_PRODUCTION\Prod_QIE_HPD\Prod_QIE_HPD.prj

CMS HCAL HPD FRONT END MODULE
Charge Integrating Encoder ASIC (QIE)

SIZE	SCALE	FILMED	DRAWING NUMBER	PAGE 01 of 01	REV
C	1:1				

H=4ND; V=4LA

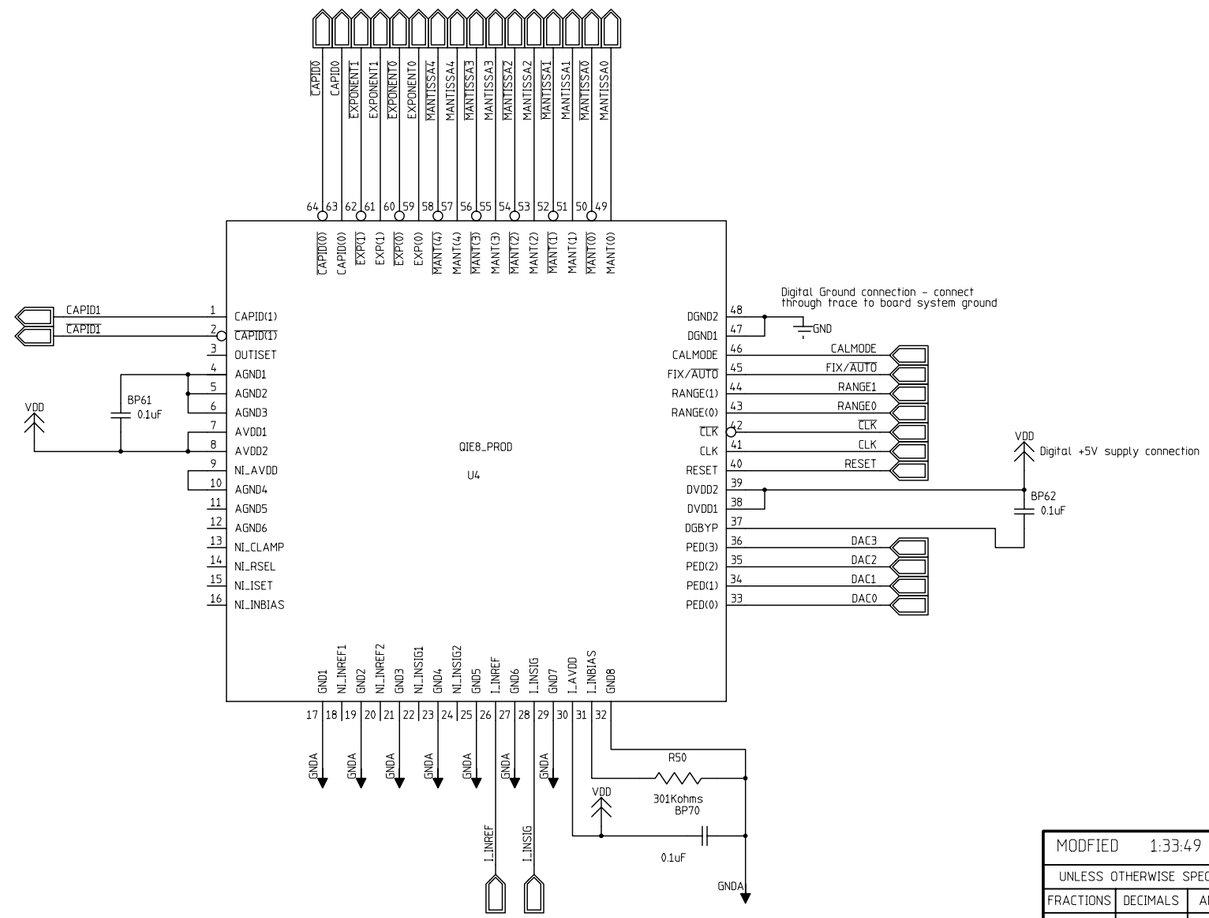

MODIFIED 1:33:49 PM 10/21/2003			
UNLESS OTHERWISE SPECIFIED		ORIGINATOR	Theresa M. Shaw
FRACTIONS	DECIMALS	ANGLES	DRAWN
			CHECKED
			APPROVED

1. BREAK ALL SHARP EDGES 1/64 MAX.
2. DO NOT SCALE DWG.
3. DIMENSIONING IN ACCORD WITH ANSI Y14.5 STD's.

√ MAX. ALL MACHINED SURFACES

USED ON

MATERIAL

Fermi National Accelerator Laboratory
United States Department of Energy

D:\QIE_PRODUCTION\Prod_QIE_HPD\Prod_QIE_HPD.prj

CMS HCAL HPD FRONT END MODULE
Charge Integrating Encoder ASIC (QIE)

SIZE	SCALE	FILMED	DRAWING NUMBER	PAGE 01 of 01	REV
C	1:1				

H=4ND; V=4LA

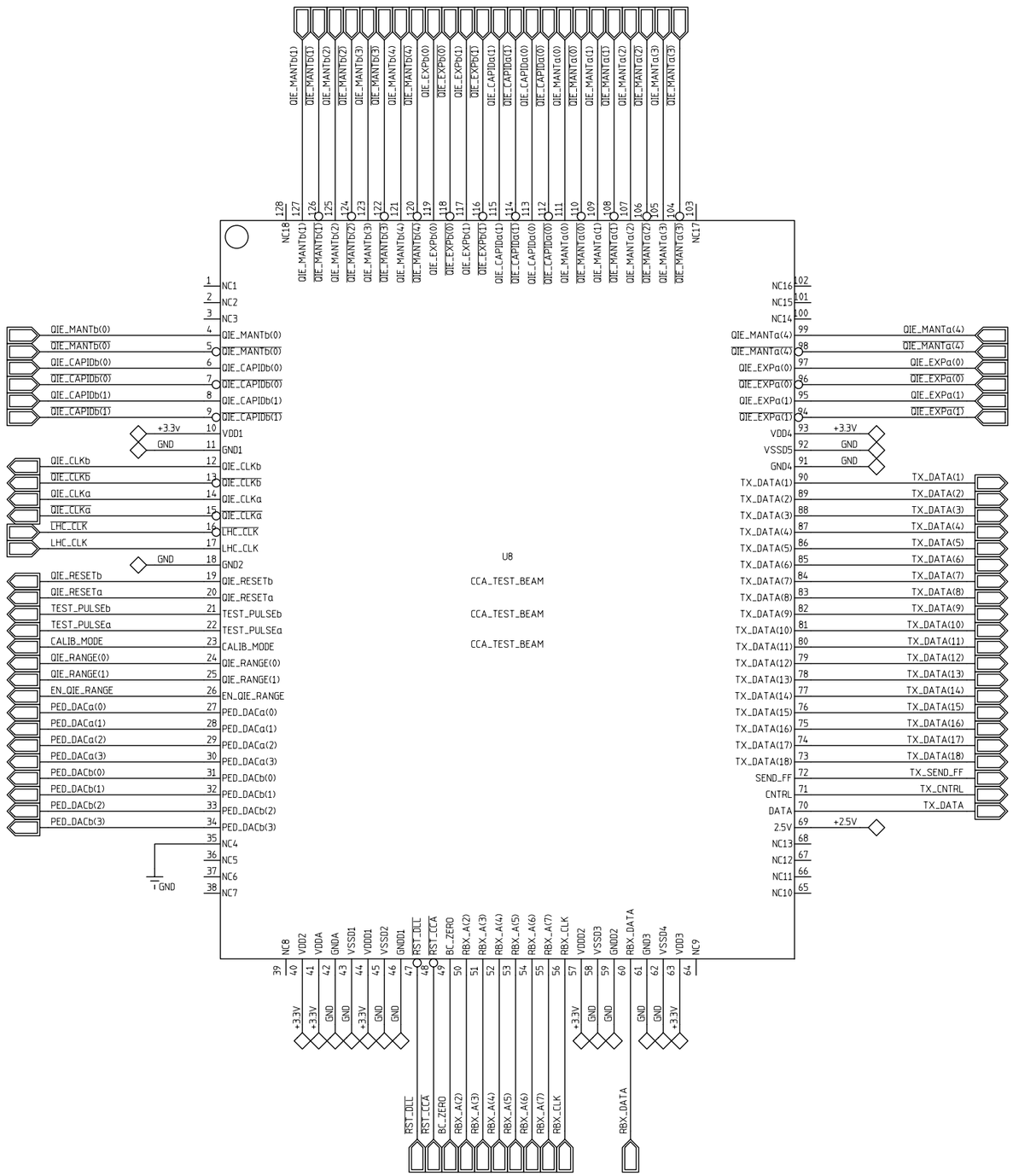

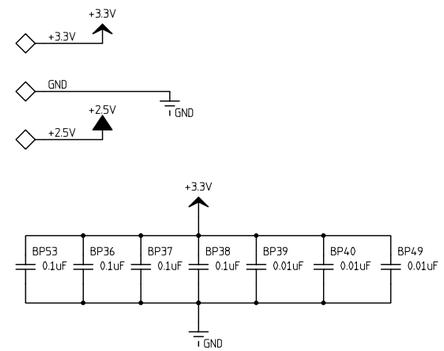

MODIFIED 1:15:33 PM 10/21/2003				
UNLESS OTHERWISE SPECIFIED			ORIGINATOR	Theresa M. Shaw
FRACTIONS	DECIMALS	ANGLES	DRAWN	
			CHECKED	
			APPROVED	

1. BREAK ALL SHARP EDGES 1/64 MAX.
2. DO NOT SCALE DWG.
3. DIMENSIONING IN ACCORD WITH ANSI Y14.5 STD's.

MAX. ALL MACHINED SURFACES

USED ON

MATERIAL

Fermi National Accelerator Laboratory
United States Department of Energy

D:\QIE_PRODUCTION\Prod_QIE_HPD\Prod_QIE_HPD.prj

CMS HCAL HPD FRONT END MODULE
Channel Control ASIC (CCA)

SIZE	SCALE	FILMED	DRAWING NUMBER	PAGE 01 of 01	REV
C	1:1				

H=4ND; V=4LA

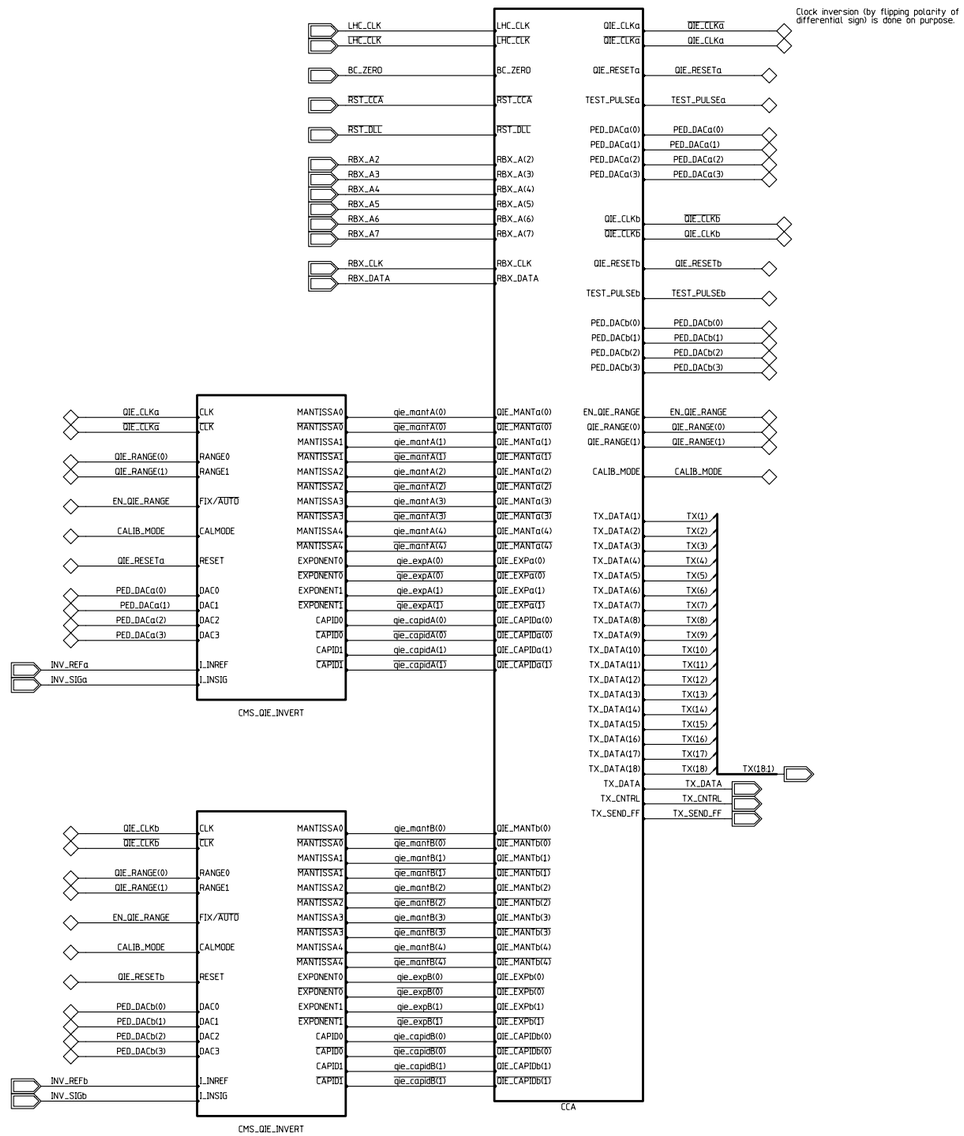

MODIFIED 1:14:33 PM 10/21/2003					
UNLESS OTHERWISE SPECIFIED			ORIGINATOR	Theresa M. Shaw	
FRACTIONS	DECIMALS	ANGLES	DRAWN		
			CHECKED		
1. BREAK ALL SHARP EDGES 1/64 MAX. 2. DO NOT SCALE DWG. 3. DIMENSIONING IN ACCORD WITH ANSI Y14.5 STD's. √ MAX. ALL MACHINED SURFACES			APPROVED		
			USED ON		
			MATERIAL		

Fermi National Accelerator Laboratory
United States Department of Energy

D:\QIE_PRODUCTION\Prod_QIE_HPD\Prod_QIE_HPD.prj

CMS HCAL HPD FRONT END MODULE
QIE to CCA Block

SIZE	SCALE	FILMED	DRAWING NUMBER	PAGE 01 of 01	REV
D	1:1				A

H=BND; V=4LA

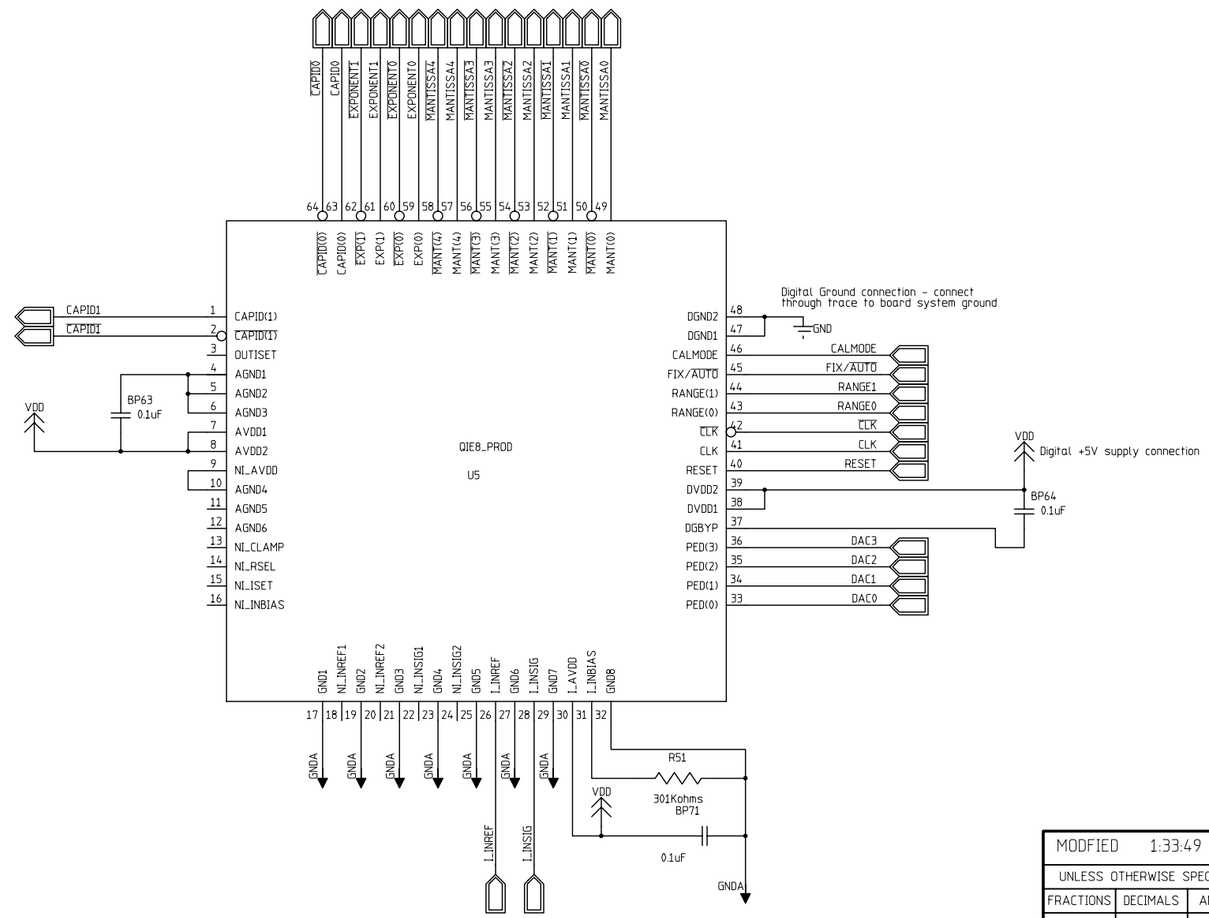

MODIFIED 1:33:49 PM 10/21/2003				
UNLESS OTHERWISE SPECIFIED			ORIGINATOR	Theresa M. Shaw
FRACTIONS	DECIMALS	ANGLES	DRAWN	
			CHECKED	
1. BREAK ALL SHARP EDGES 1/64 MAX.			APPROVED	
2. DO NOT SCALE DWG.			USED ON	
3. DIMENSIONING IN ACCORD WITH ANSI Y14.5 STD's.			MATERIAL	
MAX. ALL MACHINED SURFACES				

Fermi National Accelerator Laboratory
United States Department of Energy

D:\QIE_PRODUCTION\Prod_QIE_HPD\Prod_QIE_HPD.prj

CMS HCAL HPD FRONT END MODULE
Charge Integrating Encoder ASIC (QIE)

SIZE	SCALE	FILMED	DRAWING NUMBER	PAGE 01 of 01	REV
C	1:1				

H=4ND; V=4LA

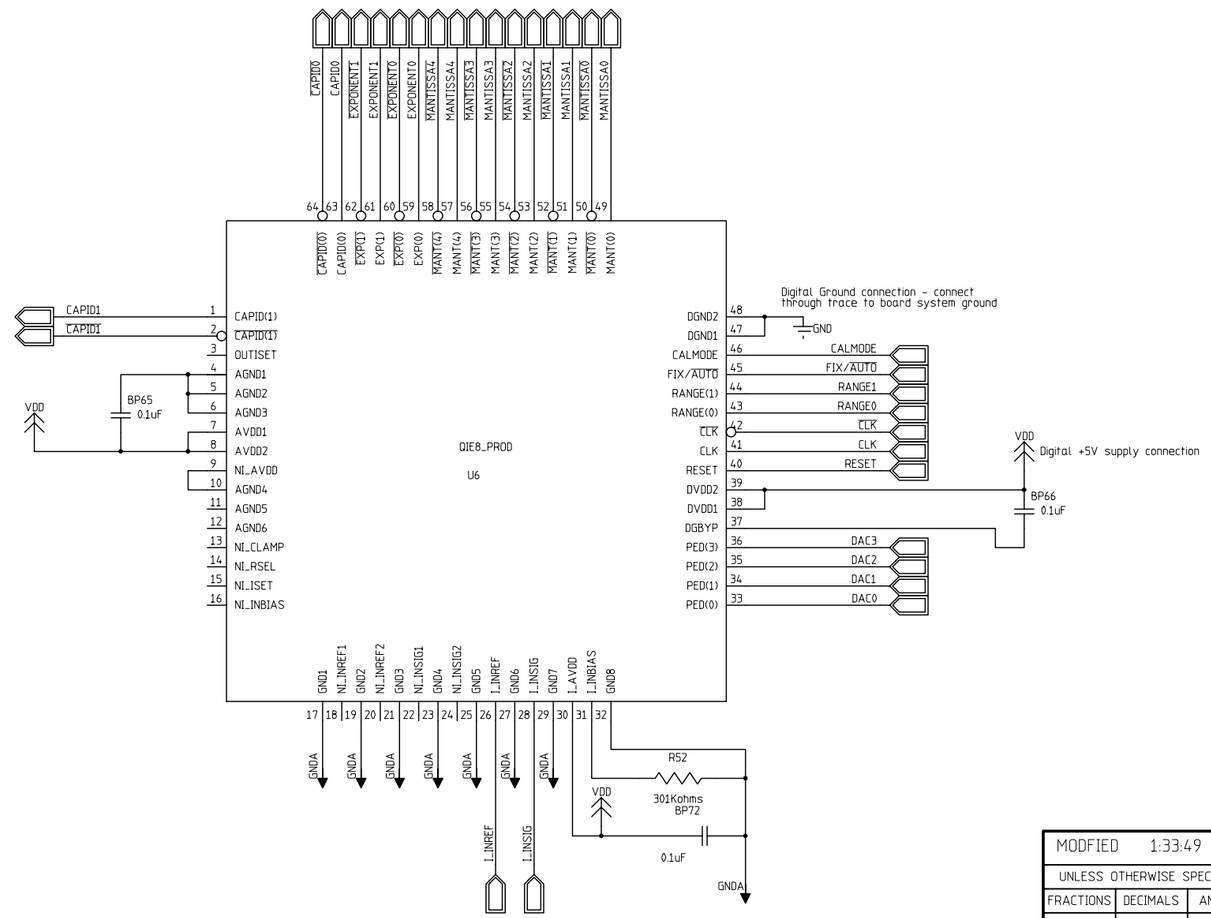

MODIFIED 1:33:49 PM 10/21/2003				
UNLESS OTHERWISE SPECIFIED			ORIGINATOR	Theresa M. Shaw
FRACTIONS	DECIMALS	ANGLES	DRAWN	
			CHECKED	
1. BREAK ALL SHARP EDGES 1/64 MAX.			APPROVED	
2. DO NOT SCALE DWG.			USED ON	
3. DIMENSIONING IN ACCORD WITH ANSI Y14.5 STD's.			MATERIAL	
MAX. ALL MACHINED SURFACES				

Fermi National Accelerator Laboratory
United States Department of Energy

D:\QIE_PRODUCTION\Prod_QIE_HPD\Prod_QIE_HPD.prj

CMS HCAL HPD FRONT END MODULE
Charge Integrating Encoder ASIC (QIE)

SIZE	SCALE	FILMED	DRAWING NUMBER	PAGE 01 of 01	REV
C	1:1				

H=4ND; V=4LA

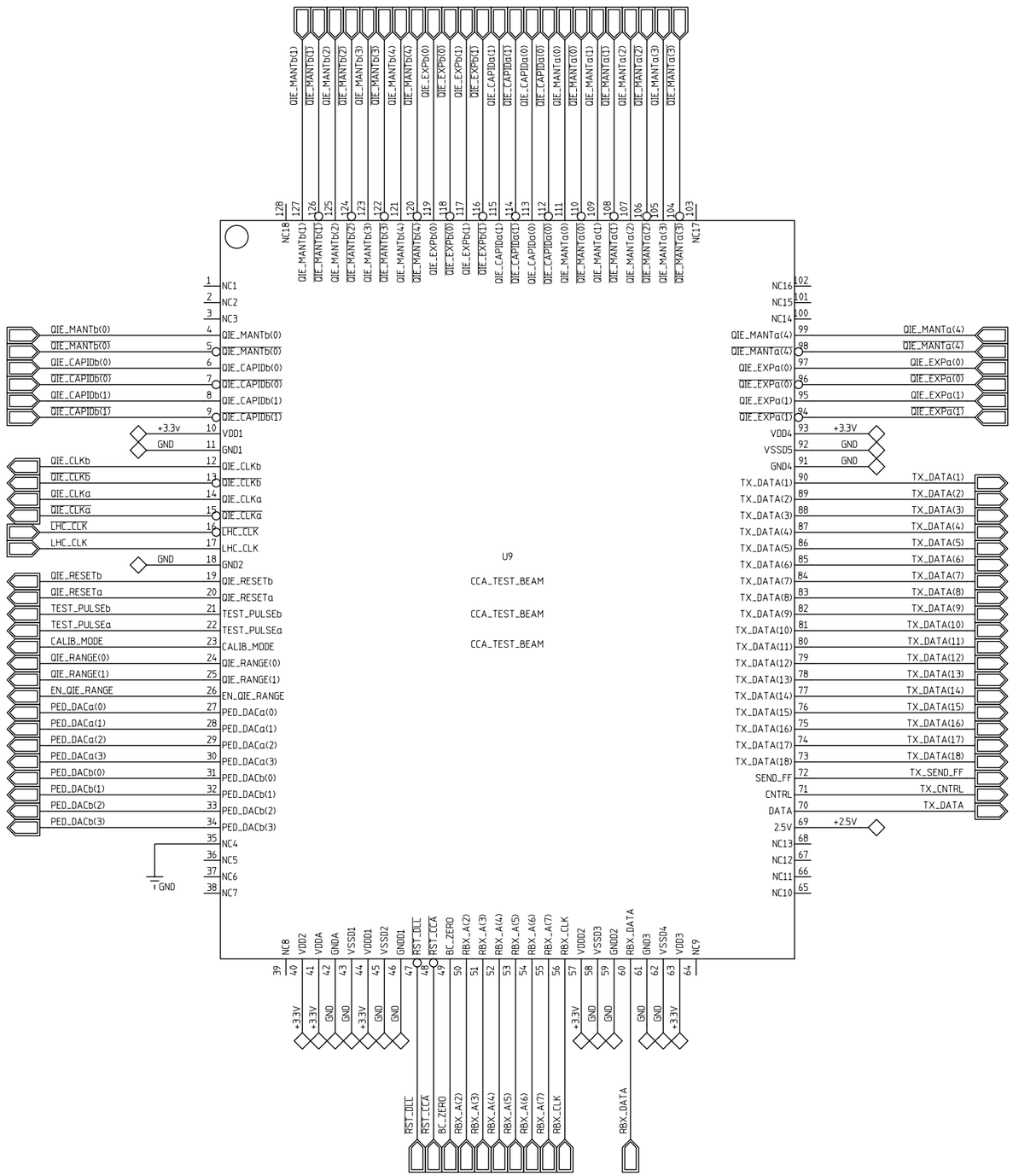

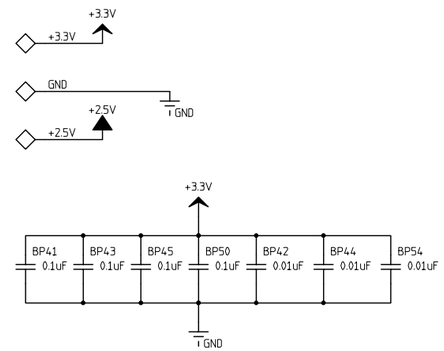

MODIFIED 1:15:33 PM 10/21/2003			
UNLESS OTHERWISE SPECIFIED		ORIGINATOR	Theresa M. Shaw
FRACTIONS	DECIMALS	ANGLES	DRAWN
			CHECKED
			APPROVED

1. BREAK ALL SHARP EDGES 1/64 MAX.
2. DO NOT SCALE DWG.
3. DIMENSIONING IN ACCORD WITH ANSI Y14.5 STD's.

MAX. ALL MACHINED SURFACES

USED ON

MATERIAL

Fermi National Accelerator Laboratory
United States Department of Energy

D:\QIE_PRODUCTION\Prod_QIE_HPD\Prod_QIE_HPD.prj

CMS HCAL HPD FRONT END MODULE
Channel Control ASIC (CCA)

SIZE	SCALE	FILMED	DRAWING NUMBER	PAGE 01 of 01	REV
C	1:1				

H=4ND; V=4LA