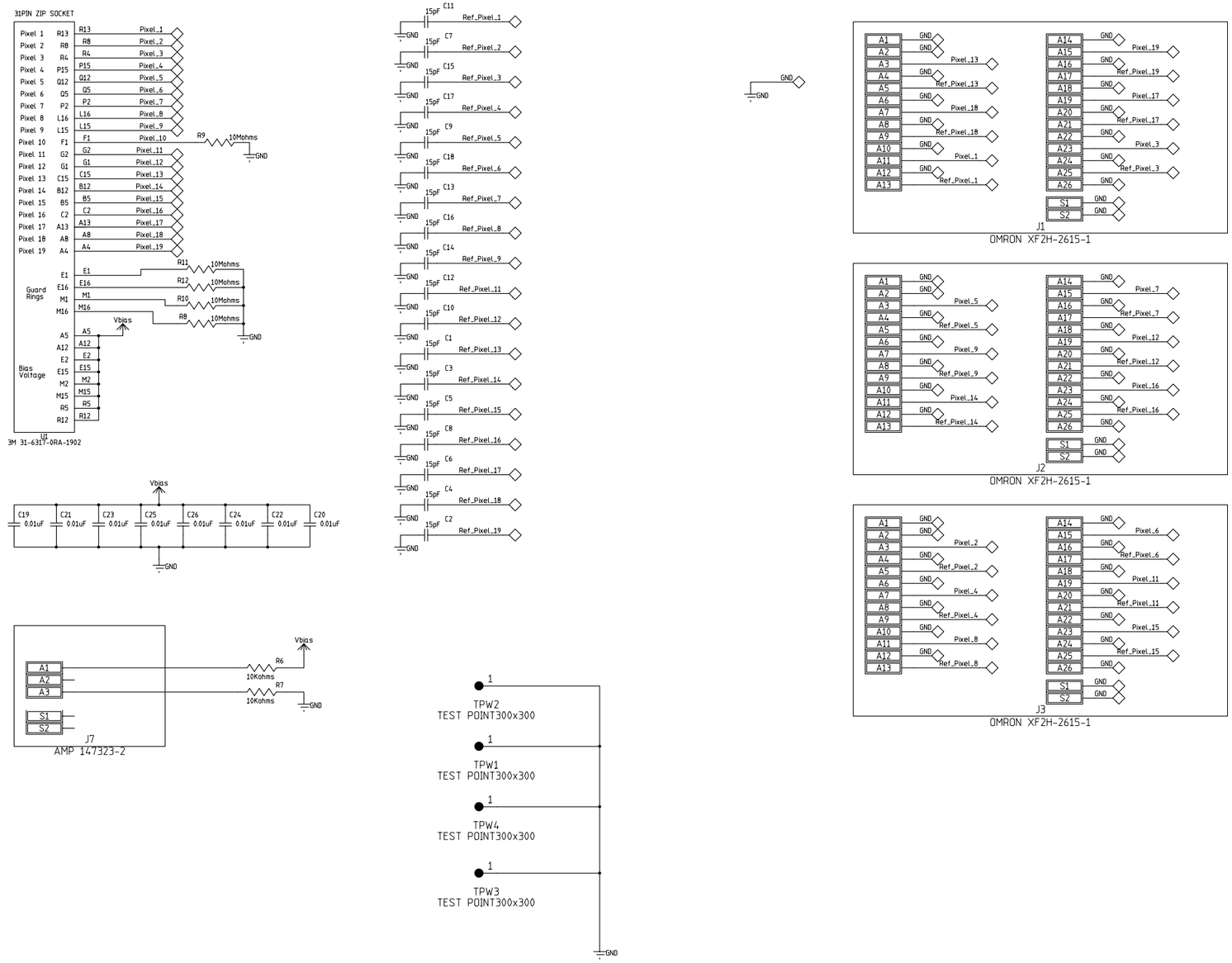

MODIFIED 03/18/2003 10:38:53 AM		Hierarchical_Page 0 of 0	Hierarchical_Page Total
EED Department	ORIGINATOR	originator	DATE date
	DRAWN	drawn	DATE date
	CHECKED	checked	DATE date
	APPROVED	approved	DATE date

Fermi National Accelerator Laboratory
United States Department of Energy

D:\Testbeam2003\HB_HPD_3\HB_HPD_3.prj

SIZE	DRAWING NUMBER	REV
D	drawing number Schematic Page 01 of 01	A

H=8ND; V=4LA