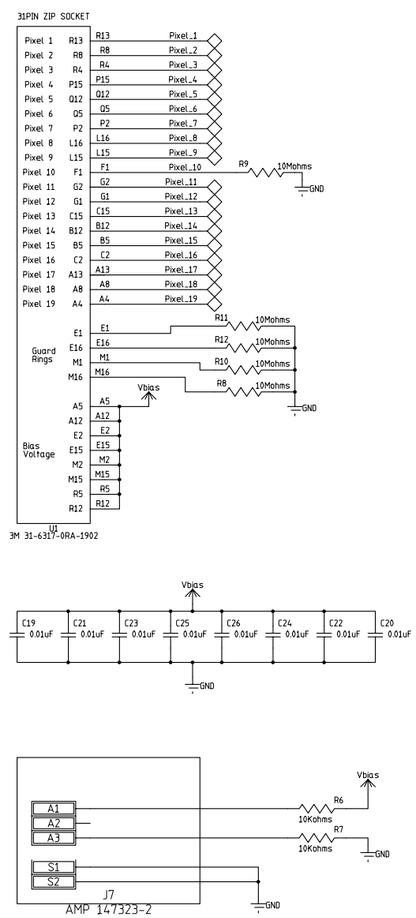

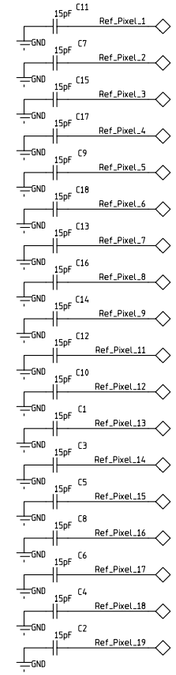

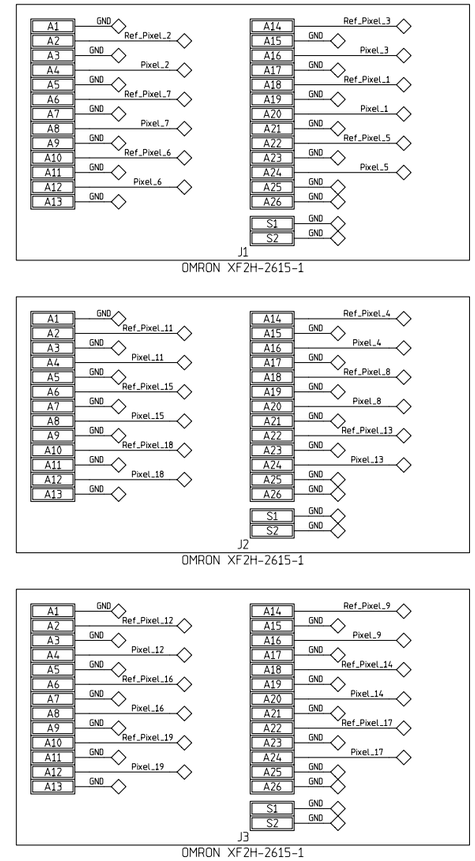

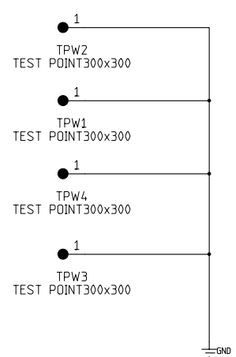

MODIFIED 03/18/2003 09:29:44 AM		Hierarchical_Page 01 of 01	Page Number Page Total
EED Department	ORIGINATOR	originator	DATE date
	DRAWN	drawn	DATE date
	CHECKED	checked	DATE date
	APPROVED	approved	DATE date

Fermi National Accelerator Laboratory
United States Department of Energy

D:\Testbeam2003\HB_HPD_4\HB_HPD_4.prj

.

SIZE	DRAWING NUMBER	REV
D	drawing number (Schematic Page 01 of 01)	A

H=8ND; V=4LA