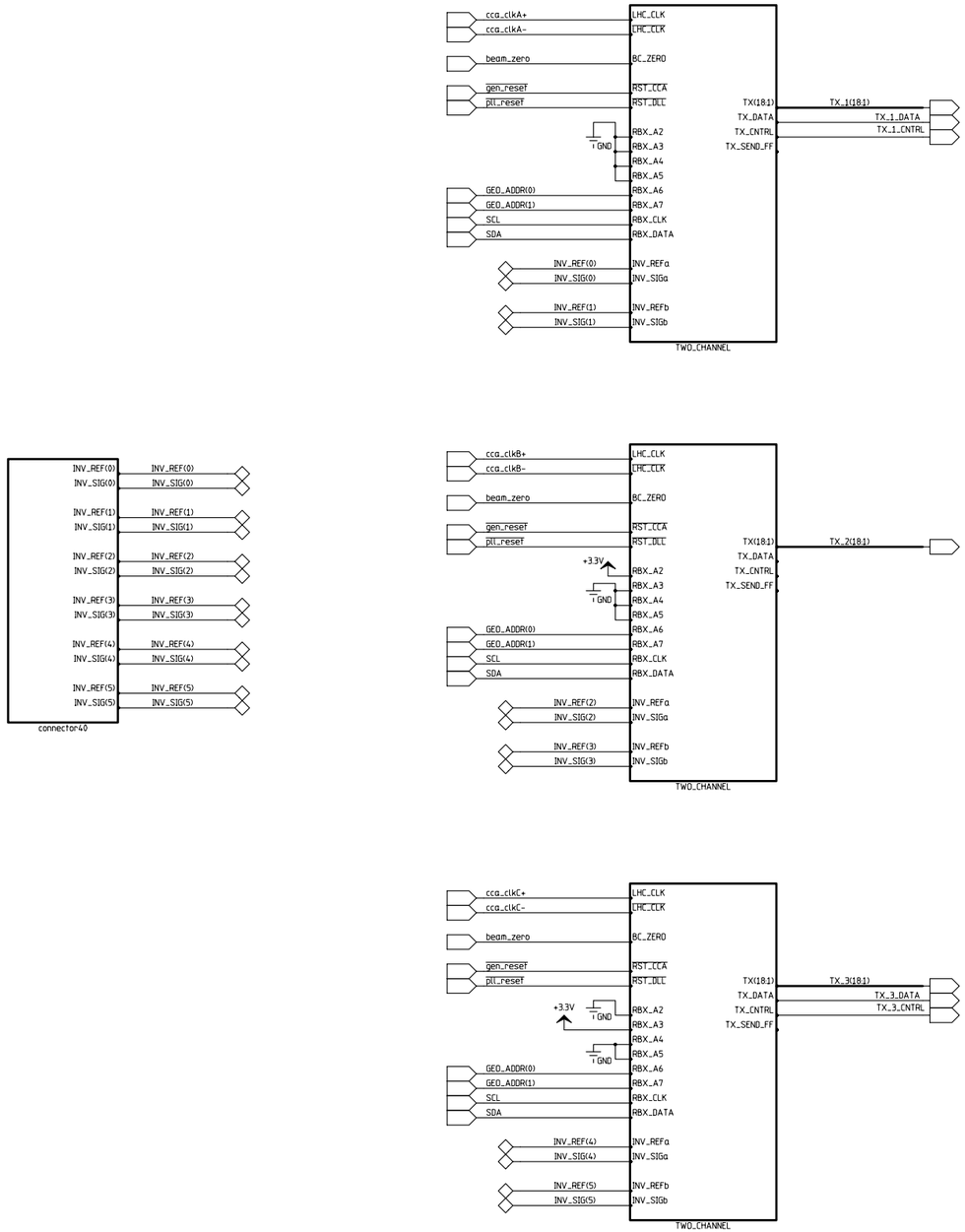

MODFIED 05:39:54 PM 02/11/2002				
UNLESS OTHERWISE SPECIFIED			ORIGINATOR	
FRACTIONS	DECIMALS	ANGLES	DRAWN	
			CHECKED	
			APPROVED	

1. BREAK ALL SHARP EDGES 1/64 MAX.
2. DO NOT SCALE DWG.
3. DIMENSIONING IN ACCORD WITH ANSI Y14.5 STD's.

√ MAX. ALL MACHINED SURFACES

USED ON

MATERIAL

Fermi National Accelerator Laboratory
United States Department of Energy

D:\ANGIE_WORK\QIE_HPD_6CHV2\QIE_HPD_6CH.prj

SIZE	SCALE	FILMED	DRAWING NUMBER	PAGE 01	Of 03	REV
D	1:1					A

H=BND; V=4LA

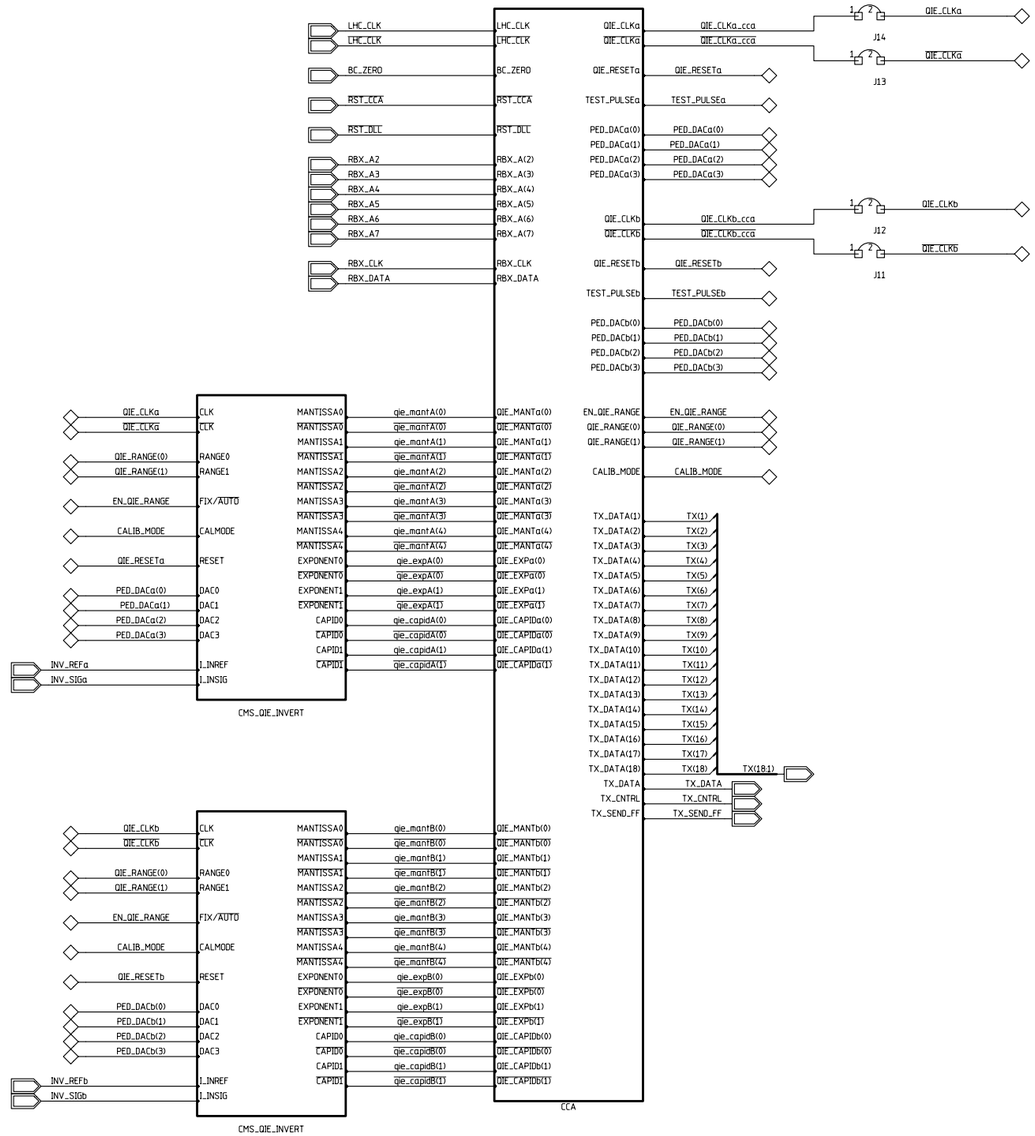

MODFIED 03:12:40 PM 05/02/2002			
UNLESS OTHERWISE SPECIFIED		ORIGINATOR	
FRACTIONS	DECIMALS	ANGLES	DRAWN
			CHECKED
			APPROVED

1. BREAK ALL SHARP EDGES 1/64 MAX.
2. DO NOT SCALE DWG.
3. DIMENSIONING IN ACCORD WITH ANSI Y14.5 STD's.

√ MAX. ALL MACHINED SURFACES

USED ON

MATERIAL

Fermi National Accelerator Laboratory
United States Department of Energy

D:\ANGIE_WORK\QIE_HPD_6CHV2\QIE_HPD_6CH.prj

SIZE	SCALE	FILMED	DRAWING NUMBER	PAGE 01 of 01	REV
D	1:1				A

H=BND, V=4LA

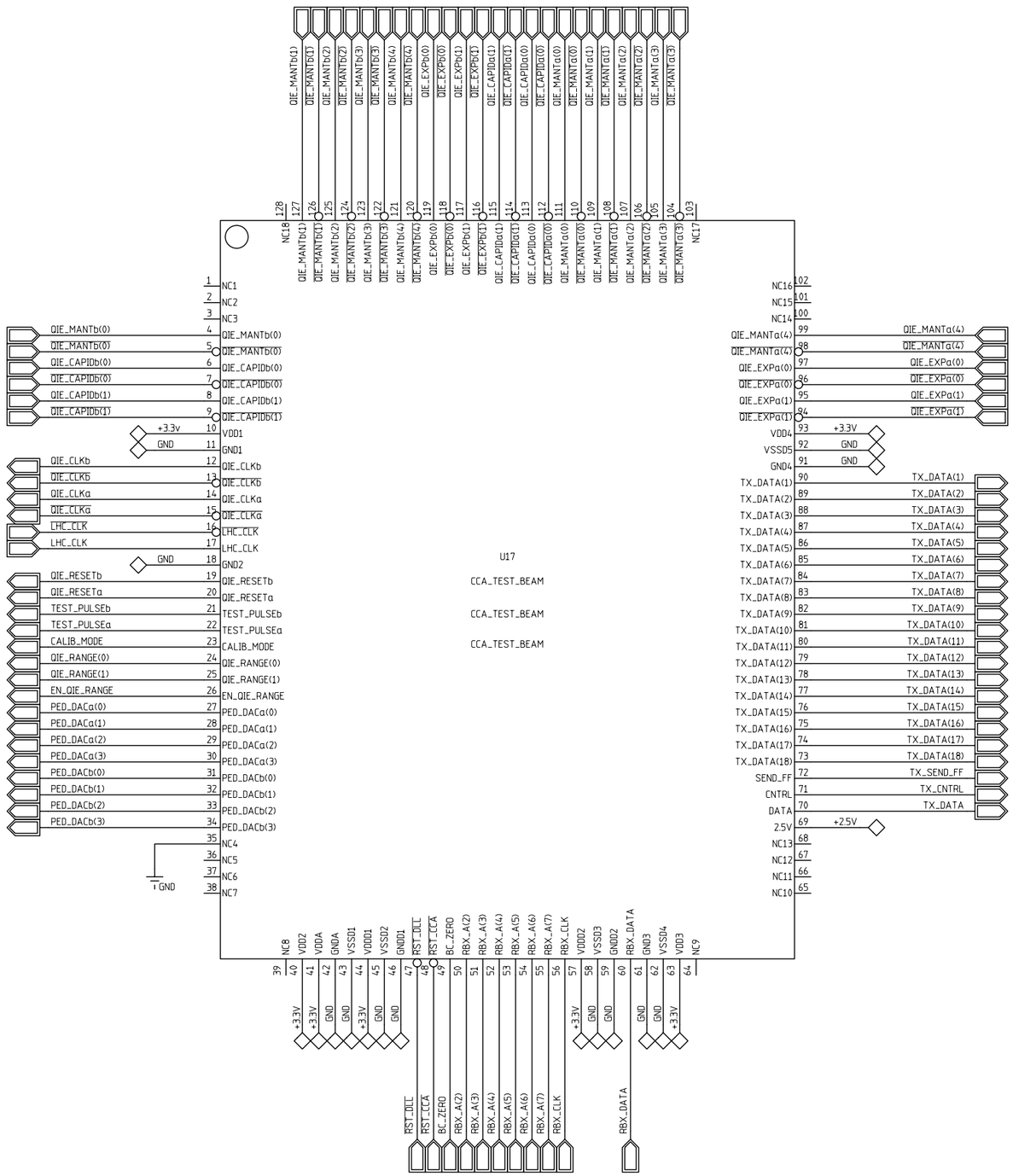

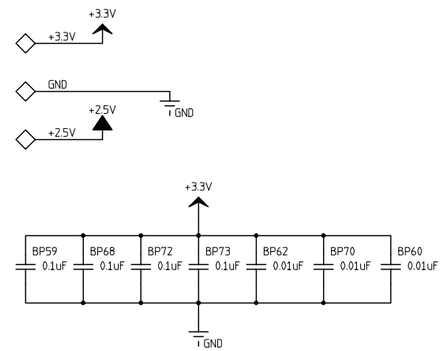

MODIFIED 09:50:13 AM 03/13/2002				
UNLESS OTHERWISE SPECIFIED			ORIGINATOR	
FRACTIONS	DECIMALS	ANGLES	DRAWN	
			CHECKED	
			APPROVED	

1. BREAK ALL SHARP EDGES 1/64 MAX.
2. DO NOT SCALE DWG.
3. DIMENSIONING IN ACCORD WITH ANSI Y14.5 STD's.

MAX. ALL MACHINED SURFACES

USED ON

MATERIAL

Fermi National Accelerator Laboratory
United States Department of Energy

D:\ANGIE_WORK\QIE_HPD_6CHV2\QIE_HPD_6CH.prj

SIZE	SCALE	FILMED	DRAWING NUMBER	PAGE 01 of 01	REV
C	1:1				

H=4ND; V=4LA

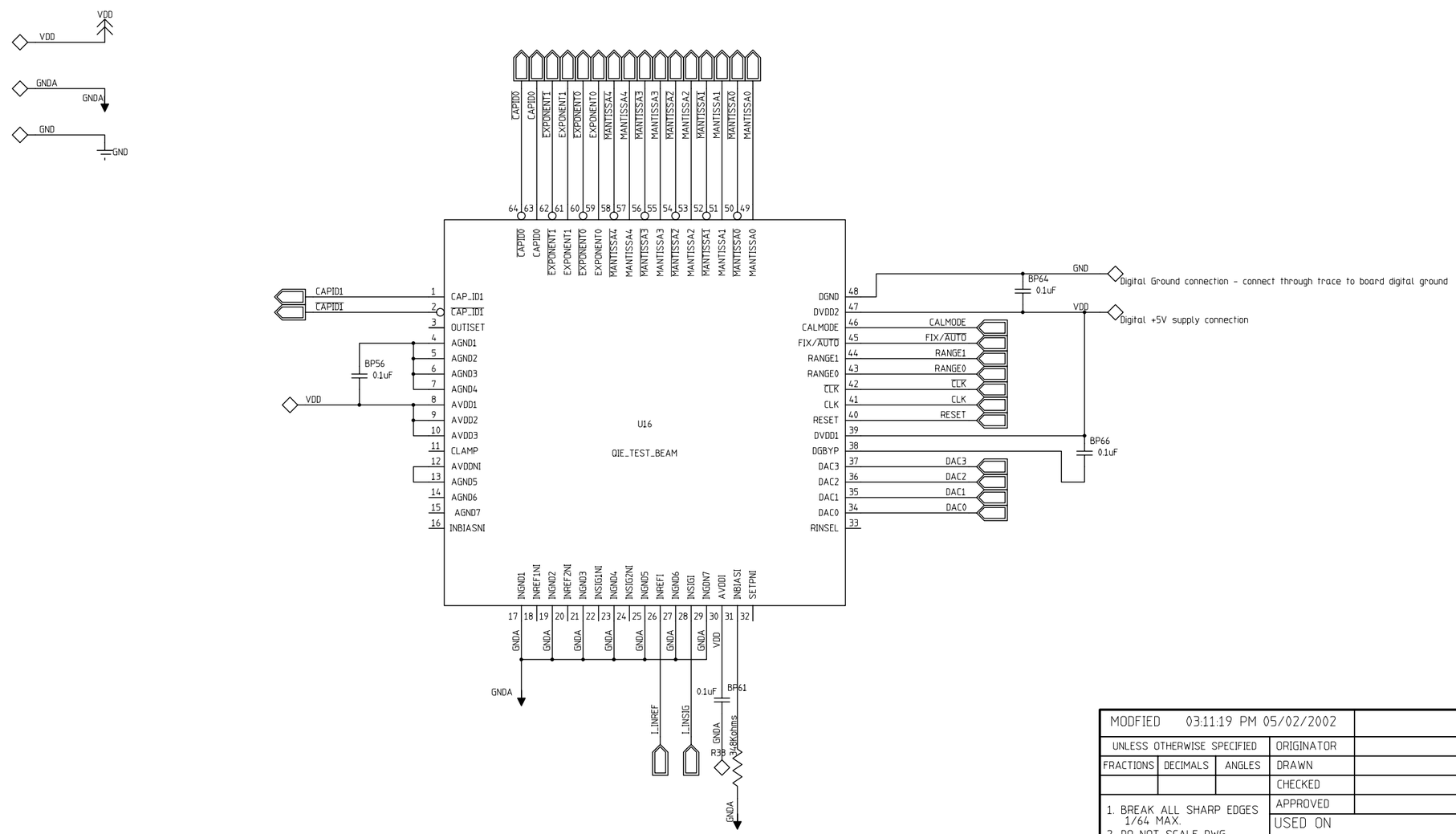

MODFIED 03:11:19 PM 05/02/2002				
UNLESS OTHERWISE SPECIFIED			ORIGINATOR	
FRACTIONS	DECIMALS	ANGLES	DRAWN	
			CHECKED	
1. BREAK ALL SHARP EDGES 1/64 MAX.			APPROVED	
2. DO NOT SCALE DWG.			USED ON	
3. DIMENSIONING IN ACCORD WITH ANSI Y14.5 STD's.				
MAX. ALL MACHINED SURFACES			MATERIAL	

Fermi National Accelerator Laboratory
United States Department of Energy

D:\ANGIE_WORK\QIE_HPD_6CHV2\QIE_HPD_6CH.prj

SIZE	SCALE	FILMED	DRAWING NUMBER	PAGE 01 of 01	REV
C	1:1				

H=4ND; V=4LA

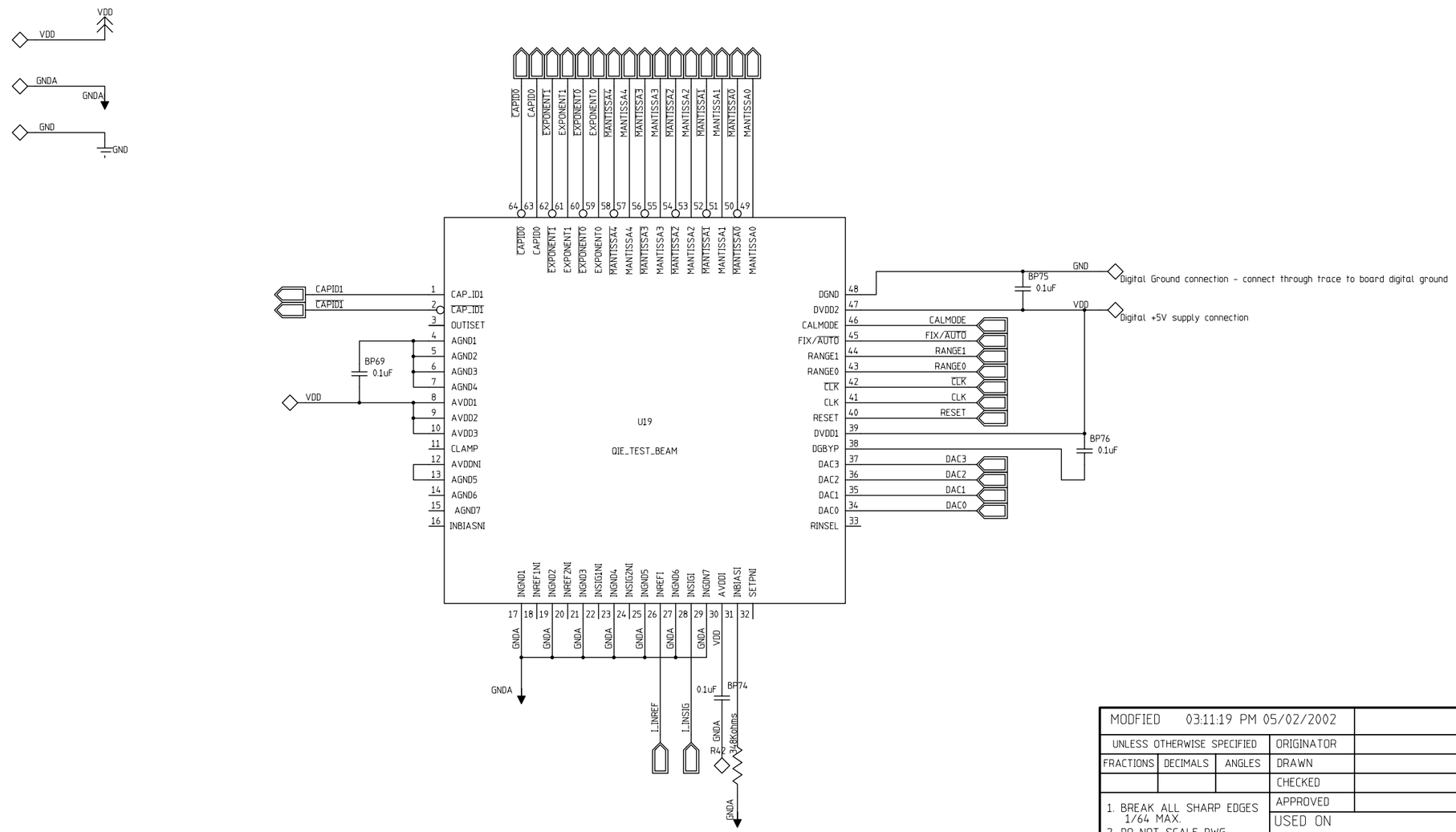

MODFIED 03:11:19 PM 05/02/2002				
UNLESS OTHERWISE SPECIFIED			ORIGINATOR	
FRACTIONS	DECIMALS	ANGLES	DRAWN	
			CHECKED	
1. BREAK ALL SHARP EDGES 1/64 MAX.			APPROVED	
2. DO NOT SCALE DWG.			USED ON	
3. DIMENSIONING IN ACCORD WITH ANSI Y14.5 STD's.				
MAX. ALL MACHINED SURFACES			MATERIAL	

Fermi National Accelerator Laboratory
United States Department of Energy

D:\ANGIE_WORK\QIE_HPD_6CHV2\QIE_HPD_6CH.prj

SIZE	SCALE	FILMED	DRAWING NUMBER	PAGE 01 of 01	REV
C	1:1				

H=4ND; V=4LA

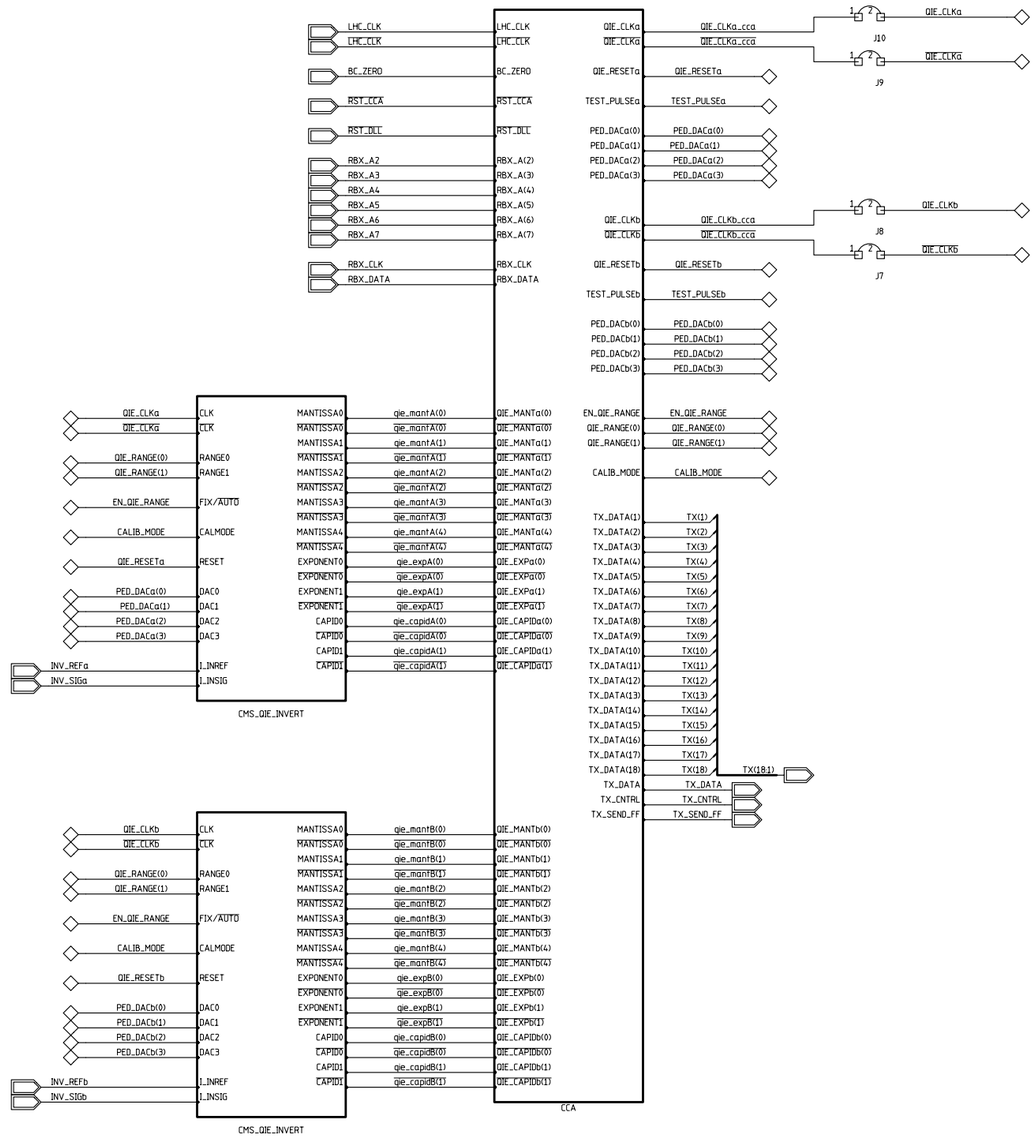

MODFIED 03:12:40 PM 05/02/2002

UNLESS OTHERWISE SPECIFIED

FRACTIONS	DECIMALS	ANGLES

ORIGINATOR	
DRAWN	
CHECKED	
APPROVED	

1. BREAK ALL SHARP EDGES 1/64 MAX.
2. DO NOT SCALE DWG.
3. DIMENSIONING IN ACCORD WITH ANSI Y14.5 STD'S.

MAX. ALL MACHINED SURFACES

USED ON

MATERIAL

Fermi National Accelerator Laboratory
United States Department of Energy

D:\ANGIE_WORK\QIE_HPD_6CHV2\QIE_HPD_6CH.prj

SIZE	SCALE	FILMED	DRAWING NUMBER	PAGE 01 of 01	REV
D	1:1				A

H=BND, V=4LA

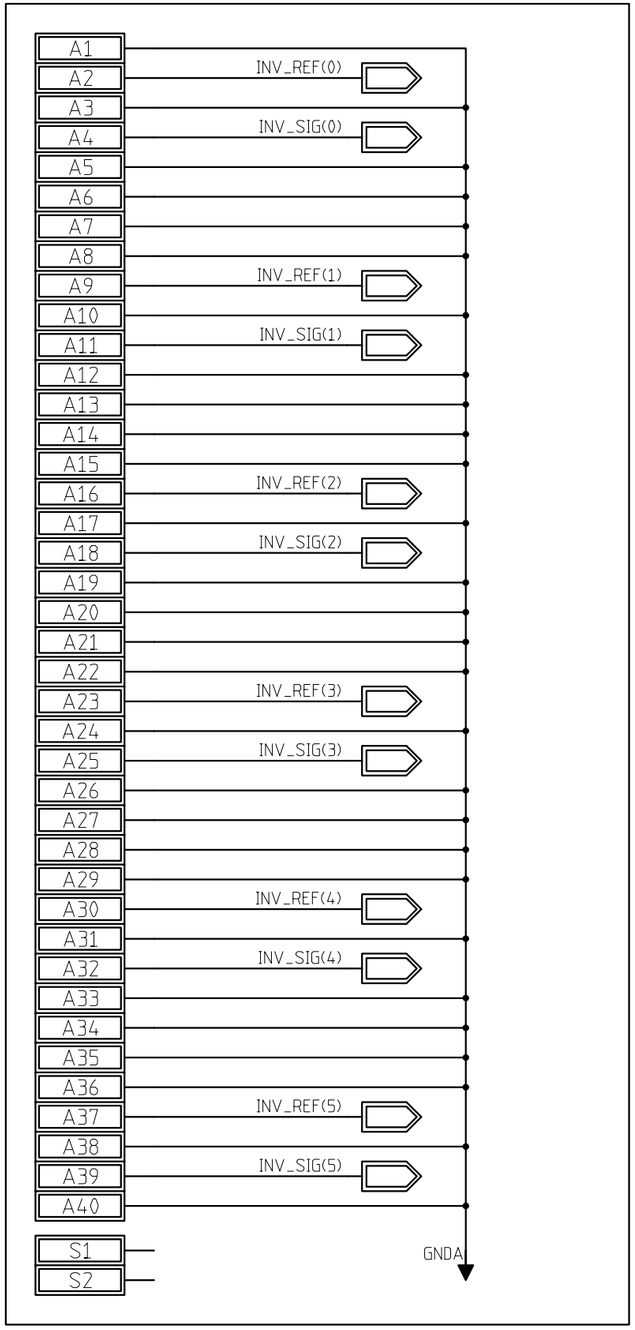

J3
HRS CL586 0557 8

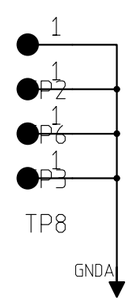

MODFIED 01:23:56 PM 05/03/2002					
UNLESS OTHERWISE SPECIFIED			ORIGINATOR		
FRACTIONS	DECIMALS	ANGLES	DRAWN		
			CHECKED		
1. BREAK ALL SHARP EDGES 1/64 MAX. 2. DO NOT SCALE DWG. 3. DIMENSIONING IN ACCORD WITH ANSI Y14.5 STD's. √ MAX. ALL MACHINED SURFACES			APPROVED		
			USED ON		
			MATERIAL		

Fermi National Accelerator Laboratory
United States Department of Energy

D:\ANGIE_WORK\QIE_HPD_6CHV2\QIE_HPD_6CH.prj

SIZE	SCALE	FILMED	DRAWING NUMBER	PAGE 01 of 01	REV
B	1:1				

H=2LA; V=2LA

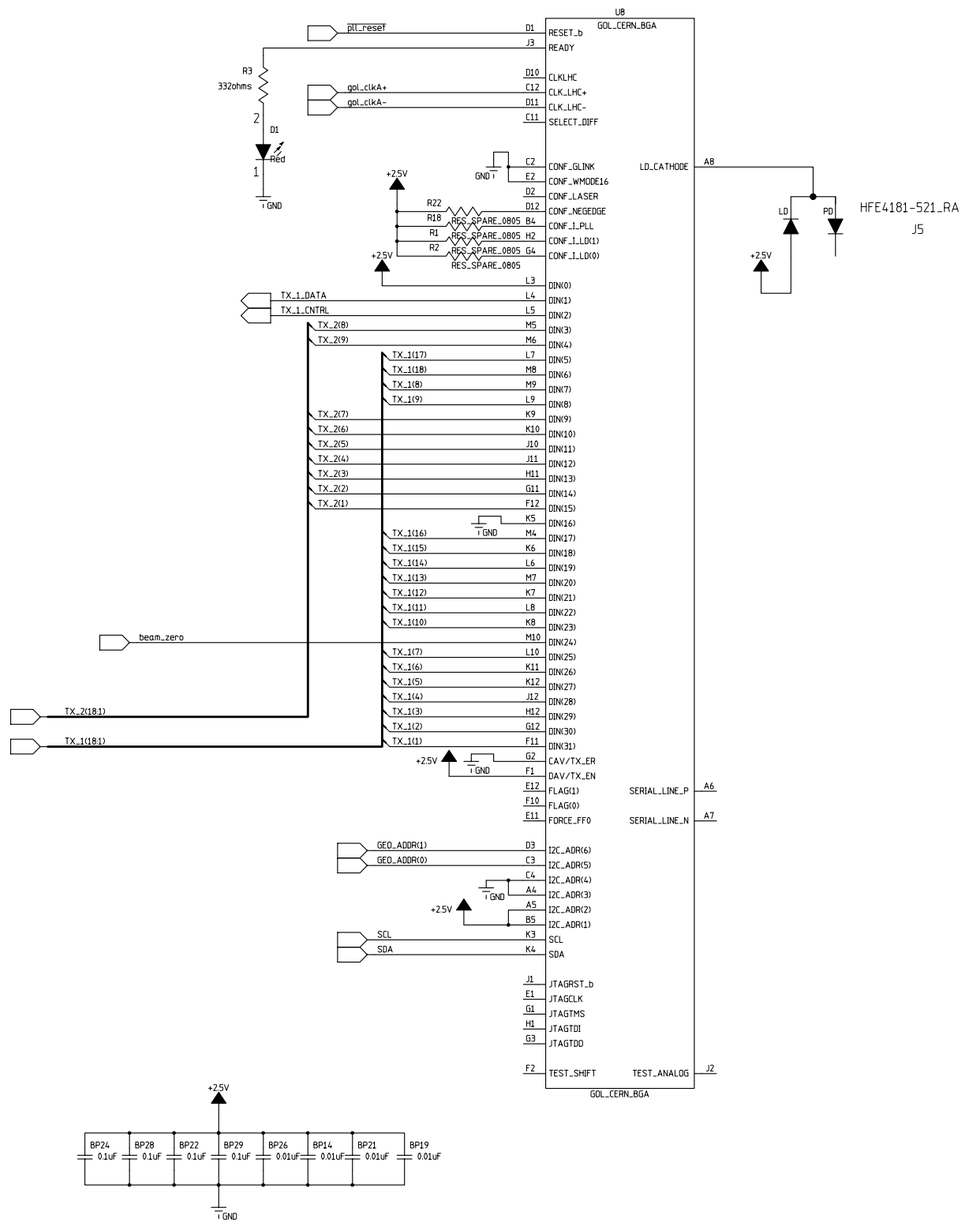

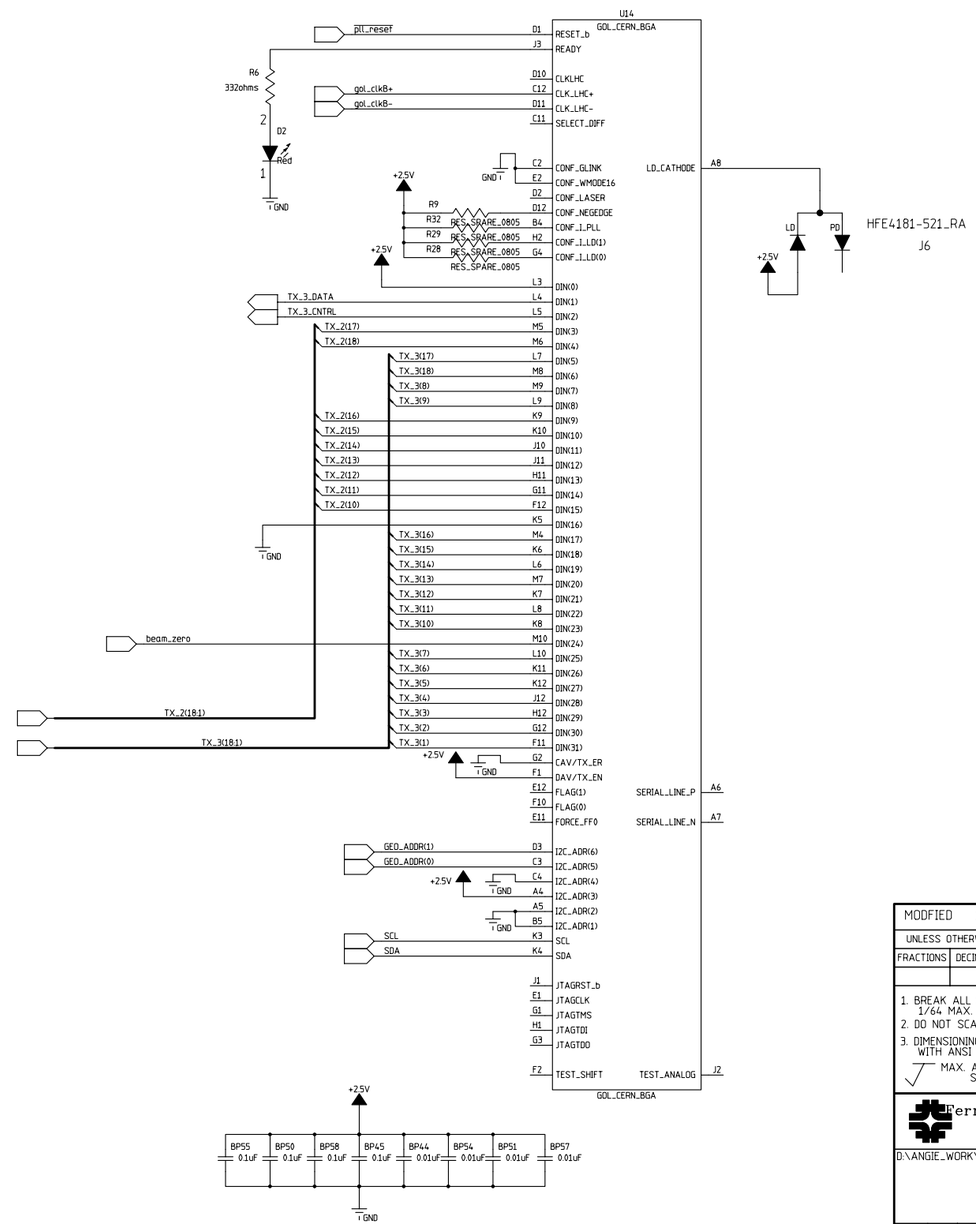

MODFIED 10:51:31 AM 05/28/2002					
UNLESS OTHERWISE SPECIFIED			ORIGINATOR		
FRACTIONS	DECIMALS	ANGLES	DRAWN		
			CHECKED		
			APPROVED		
1. BREAK ALL SHARP EDGES 1/64 MAX. 2. DO NOT SCALE DWG. 3. DIMENSIONING IN ACCORD WITH ANSI Y14.5 STD's. √ MAX. ALL MACHINED SURFACES			USED ON		
			MATERIAL		

Fermi National Accelerator Laboratory
United States Department of Energy

D:\ANGIE_WORK\QIE_HPD_6CHV2\QIE_HPD_6CH.prj

SIZE	SCALE	FILMED	DRAWING NUMBER	PAGE 03 of 03	REV
D	1:1				A

H=BND. V=4LA

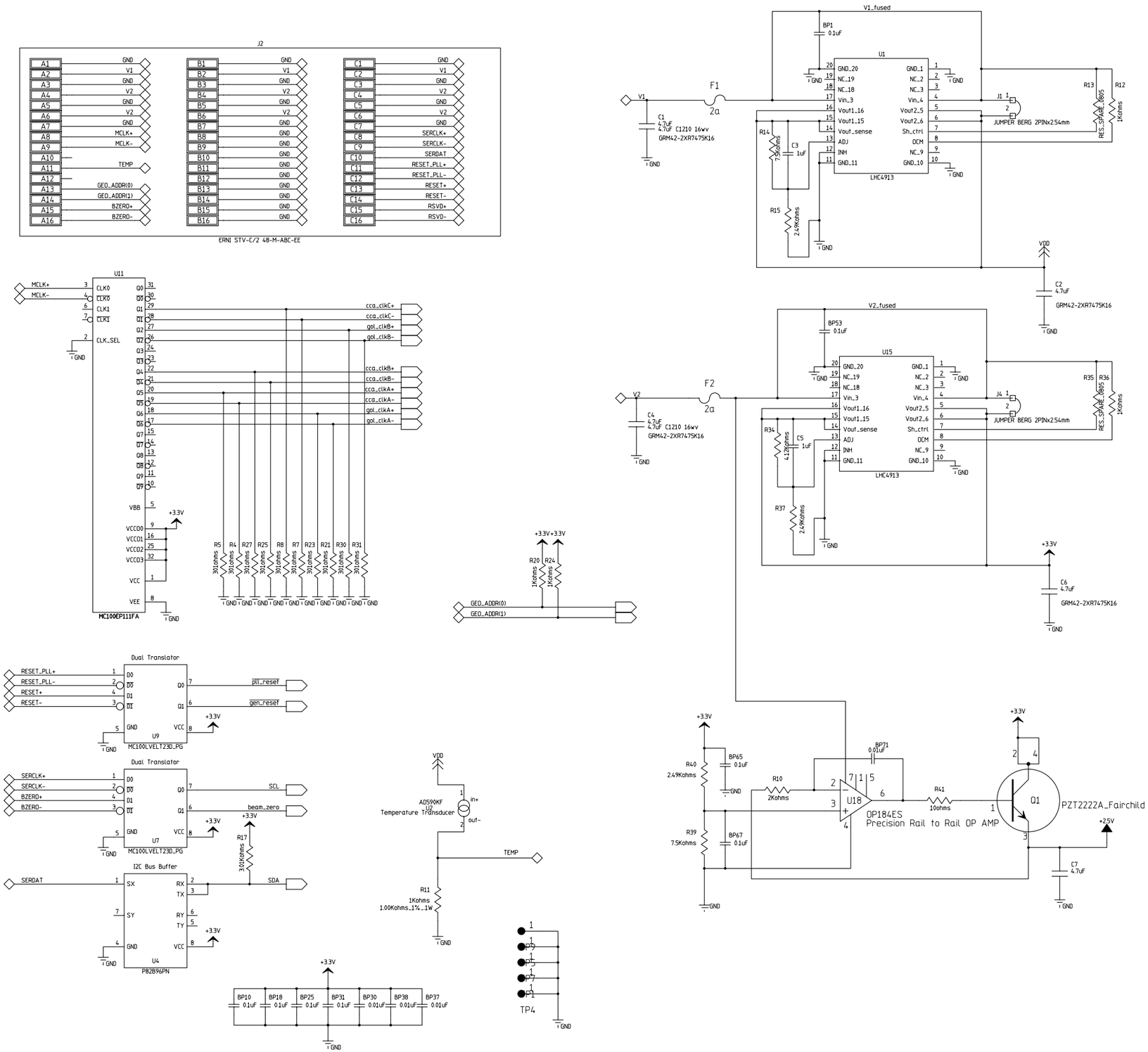

MODIFIED	11:00:06 AM 05/28/2002
UNLESS OTHERWISE SPECIFIED	ORIGINATOR
FRACTIONS / DECIMALS / ANGLES	DRAWN
	CHECKED
	APPROVED
1. BREAK ALL SHARP EDGES 1/64 MAX. 2. DO NOT SCALE DWG. 3. DIMENSIONING IN ACCORD WITH ANSI Y14.5 STD's.	USED ON
MAX. ALL MACHINED SURFACES	MATERIAL

Fermi National Accelerator Laboratory
United States Department of Energy

D:\ANGIE_WORK\QIE_HPD_6CHV2\QIE_HPD_6CH.prj

SIZE	SCALE	FILMED	DRAWING NUMBER	PAGE 02 of 03	REV
D	1:1				A

H=BND; V=4LA

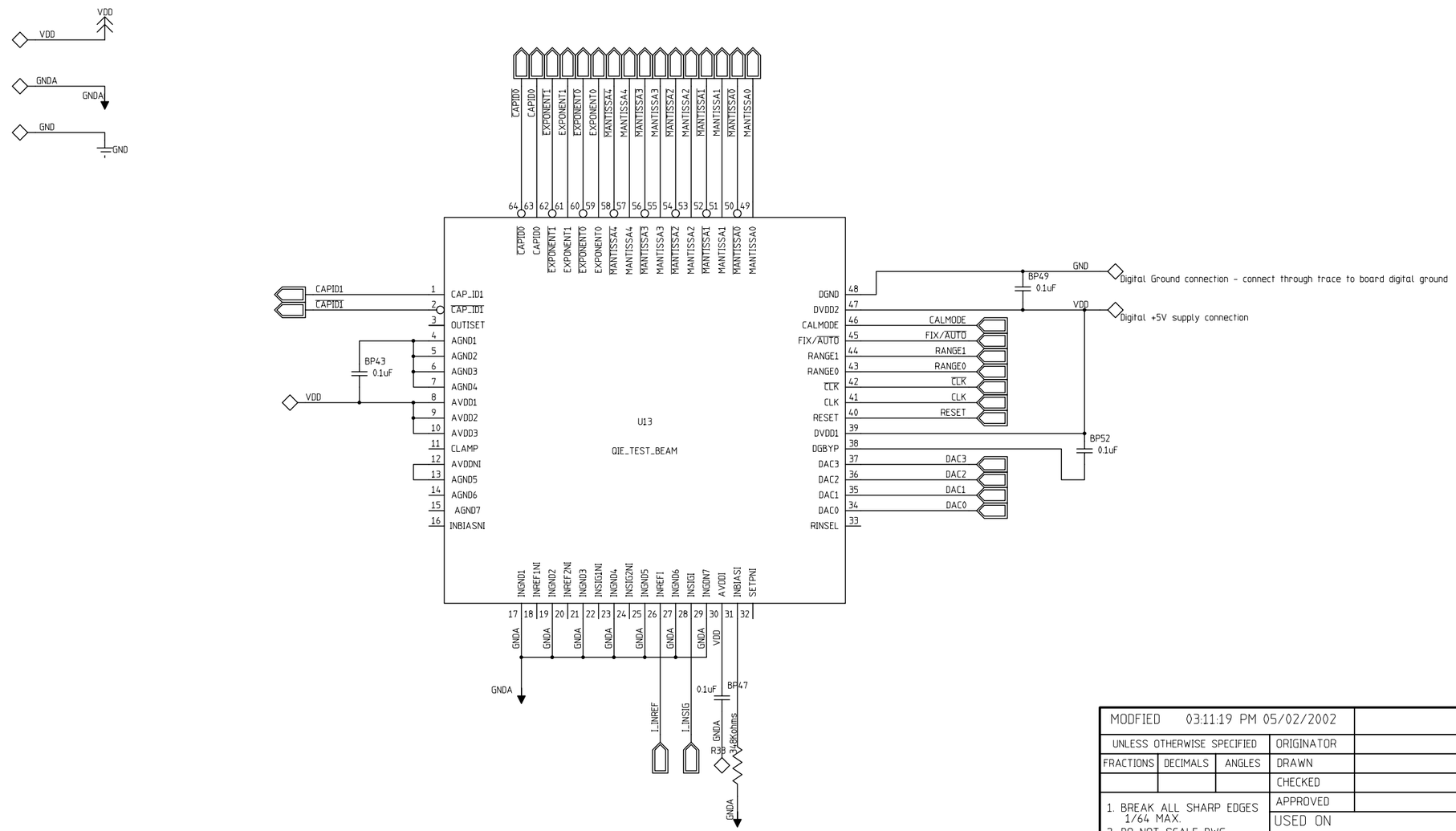

MODFIED 03:11:19 PM 05/02/2002				
UNLESS OTHERWISE SPECIFIED			ORIGINATOR	
FRACTIONS	DECIMALS	ANGLES	DRAWN	
			CHECKED	
1. BREAK ALL SHARP EDGES 1/64 MAX.			APPROVED	
2. DO NOT SCALE DWG.			USED ON	
3. DIMENSIONING IN ACCORD WITH ANSI Y14.5 STD's.				
MAX. ALL MACHINED SURFACES			MATERIAL	

Fermi National Accelerator Laboratory
United States Department of Energy

D:\ANGIE_WORK\QIE_HPD_6CHV2\QIE_HPD_6CH.prj

SIZE	SCALE	FILMED	DRAWING NUMBER	PAGE 01 of 01	REV
C	1:1				

H=4ND; V=4LA

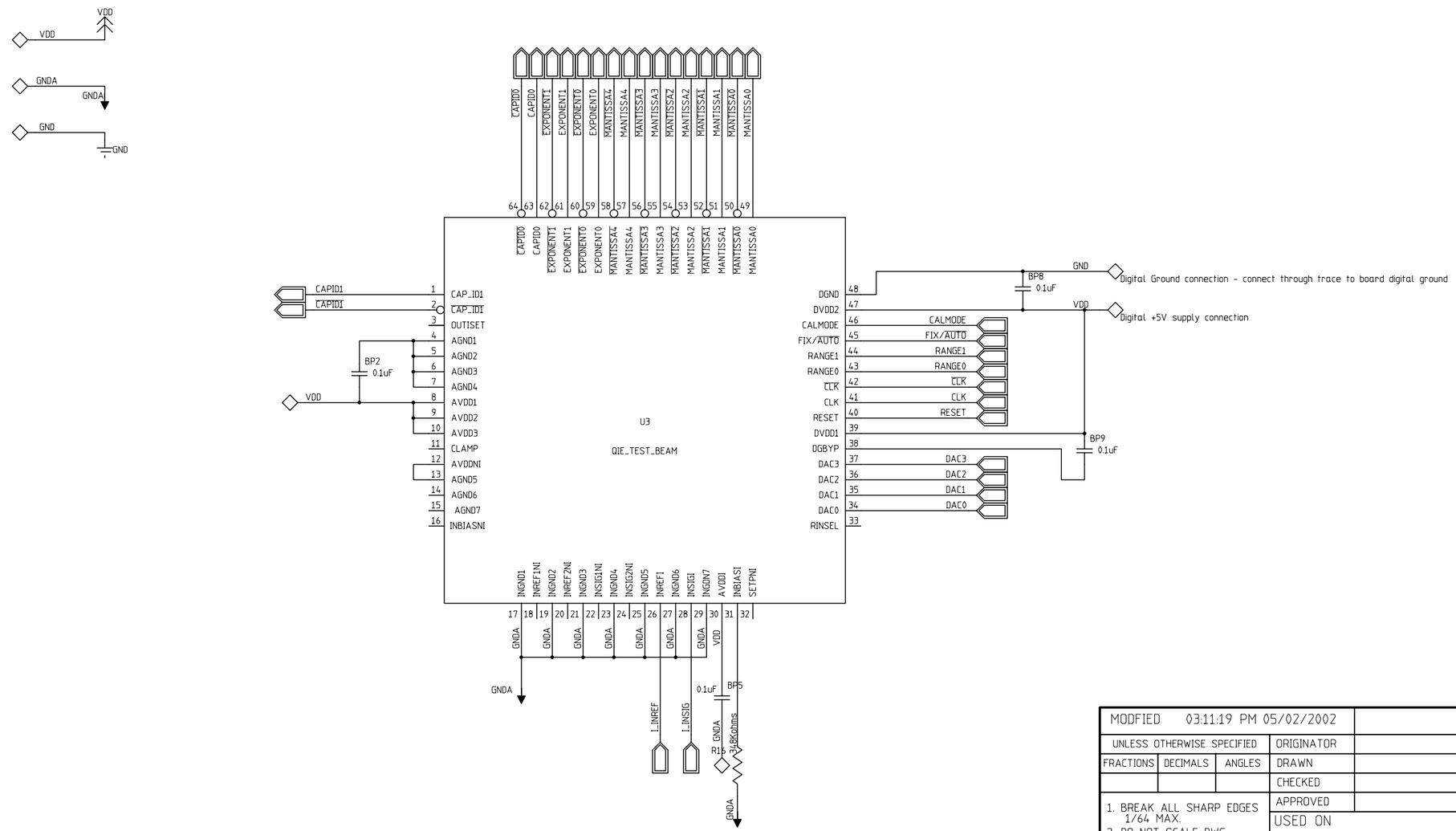

MODFIED 03:11:19 PM 05/02/2002				
UNLESS OTHERWISE SPECIFIED			ORIGINATOR	
FRACTIONS	DECIMALS	ANGLES	DRAWN	
			CHECKED	
1. BREAK ALL SHARP EDGES 1/64 MAX.			APPROVED	
2. DO NOT SCALE DWG.			USED ON	
3. DIMENSIONING IN ACCORD WITH ANSI Y14.5 STD's.				
MAX. ALL MACHINED SURFACES			MATERIAL	

Fermi National Accelerator Laboratory
United States Department of Energy

D:\ANGIE_WORK\QIE_HPD_6CHV2\QIE_HPD_6CH.prj

SIZE	SCALE	FILMED	DRAWING NUMBER	PAGE 01 of 01	REV
C	1:1				

H=4ND; V=4LA

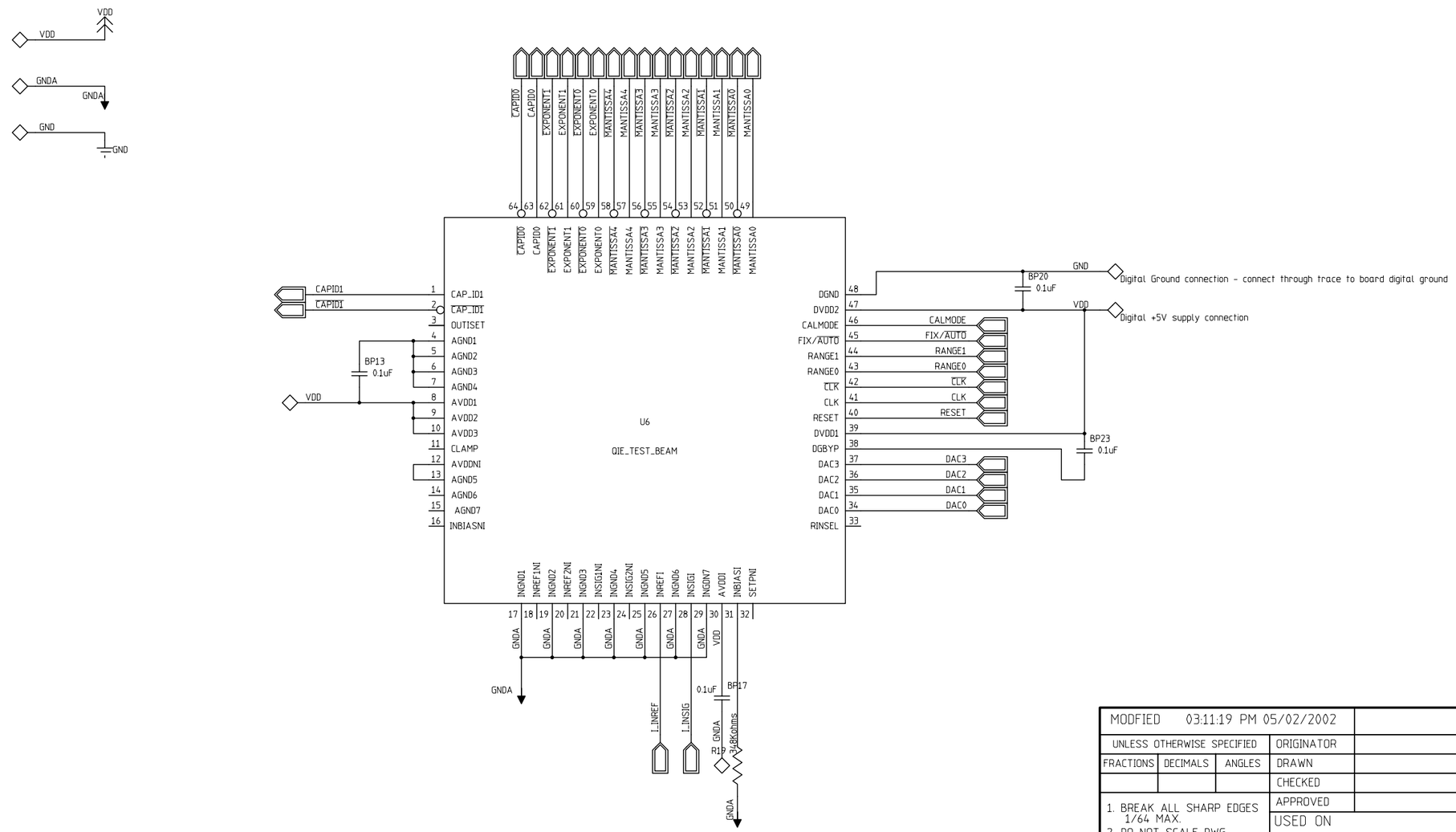

MODIFIED 03:11:19 PM 05/02/2002				
UNLESS OTHERWISE SPECIFIED			ORIGINATOR	
FRACTIONS	DECIMALS	ANGLES	DRAWN	
			CHECKED	
1. BREAK ALL SHARP EDGES 1/64 MAX.			APPROVED	
2. DO NOT SCALE DWG.			USED ON	
3. DIMENSIONING IN ACCORD WITH ANSI Y14.5 STD's.				
MAX. ALL MACHINED SURFACES			MATERIAL	

Fermi National Accelerator Laboratory
United States Department of Energy

D:\ANGIE_WORK\QIE_HPD_6CHV2\QIE_HPD_6CH.prj

SIZE	SCALE	FILMED	DRAWING NUMBER	PAGE 01 of 01	REV
C	1:1				

H=4ND; V=4LA

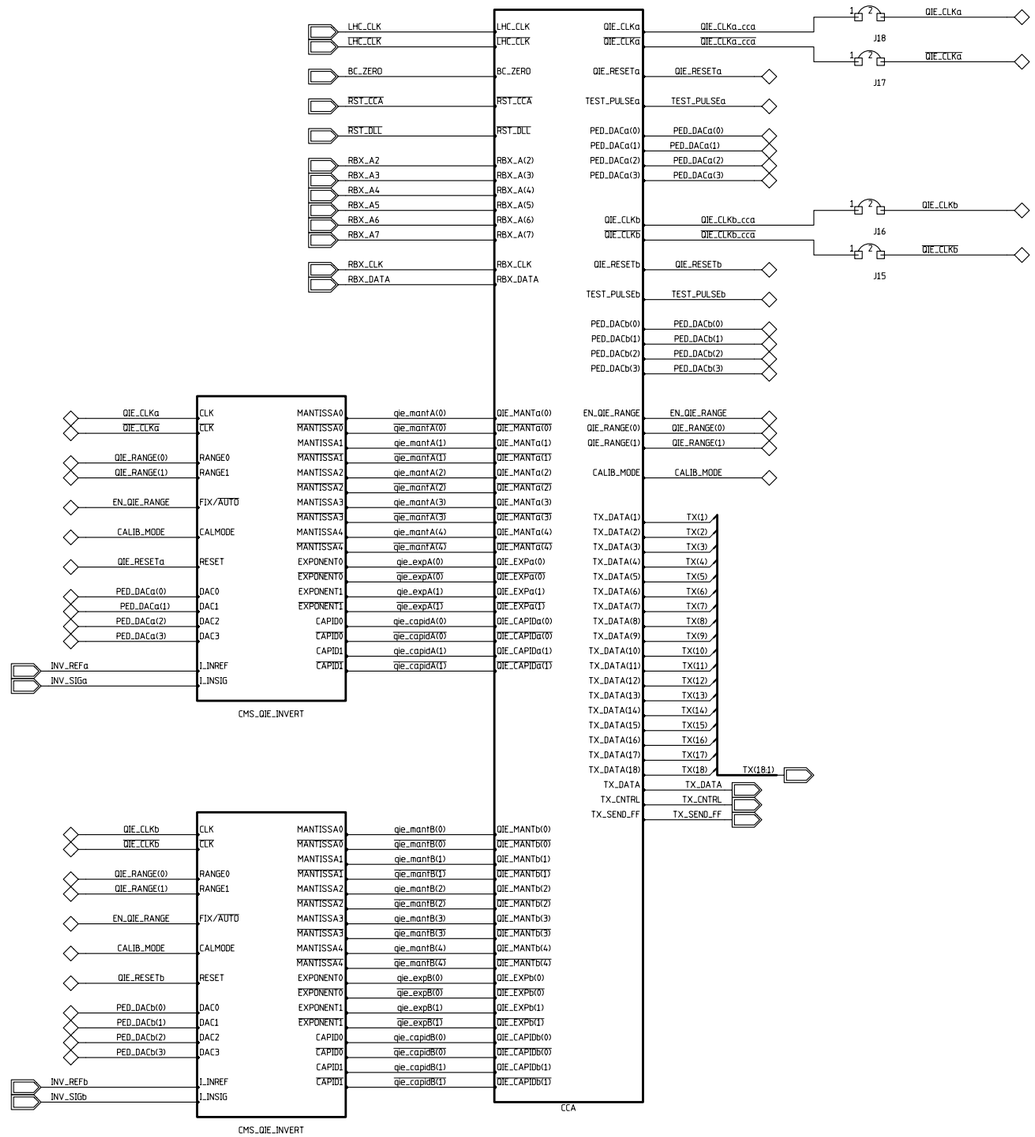

MODFIED 03:12:40 PM 05/02/2002			
UNLESS OTHERWISE SPECIFIED		ORIGINATOR	
FRACTIONS	DECIMALS	ANGLES	DRAWN
			CHECKED
			APPROVED

1. BREAK ALL SHARP EDGES 1/64 MAX.
2. DO NOT SCALE DWG.
3. DIMENSIONING IN ACCORD WITH ANSI Y14.5 STD'S.

MAX. ALL MACHINED SURFACES

USED ON

MATERIAL

Fermi National Accelerator Laboratory
United States Department of Energy

D:\ANGIE_WORK\QIE_HPD_6CHV2\QIE_HPD_6CH.prj

SIZE	SCALE	FILMED	DRAWING NUMBER	PAGE 01 of 01	REV
D	1:1				A

H=BND; V=4LA

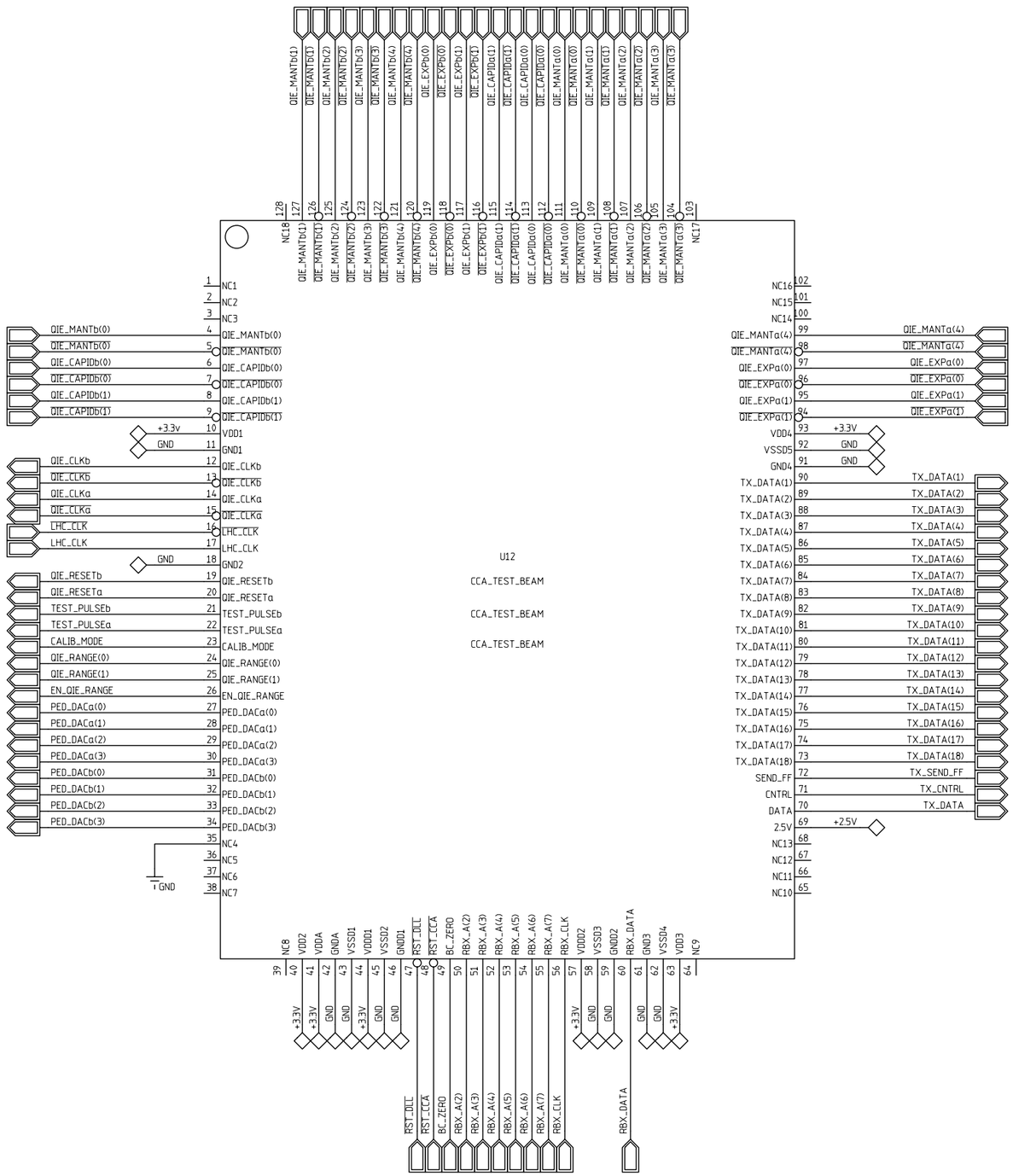

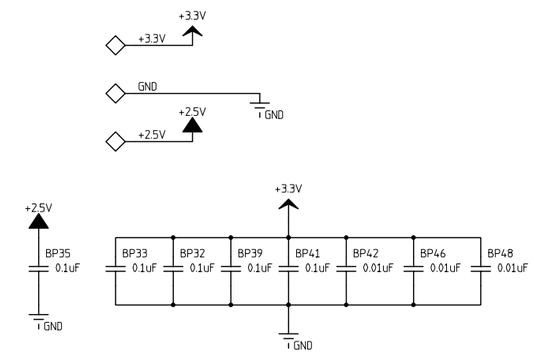

MODIFIED 09:50:13 AM 03/13/2002				
UNLESS OTHERWISE SPECIFIED			ORIGINATOR	
FRACTIONS	DECIMALS	ANGLES	DRAWN	
			CHECKED	
			APPROVED	

1. BREAK ALL SHARP EDGES 1/64 MAX.
2. DO NOT SCALE DWG.
3. DIMENSIONING IN ACCORD WITH ANSI Y14.5 STD's.

MAX. ALL MACHINED SURFACES

USED ON

MATERIAL

Fermi National Accelerator Laboratory
United States Department of Energy

D:\ANGIE_WORK\QIE_HPD_6CHV2\QIE_HPD_6CH.prj

SIZE	SCALE	FILMED	DRAWING NUMBER	PAGE 01 of 01	REV
C	1:1				

H=4ND; V=4LA

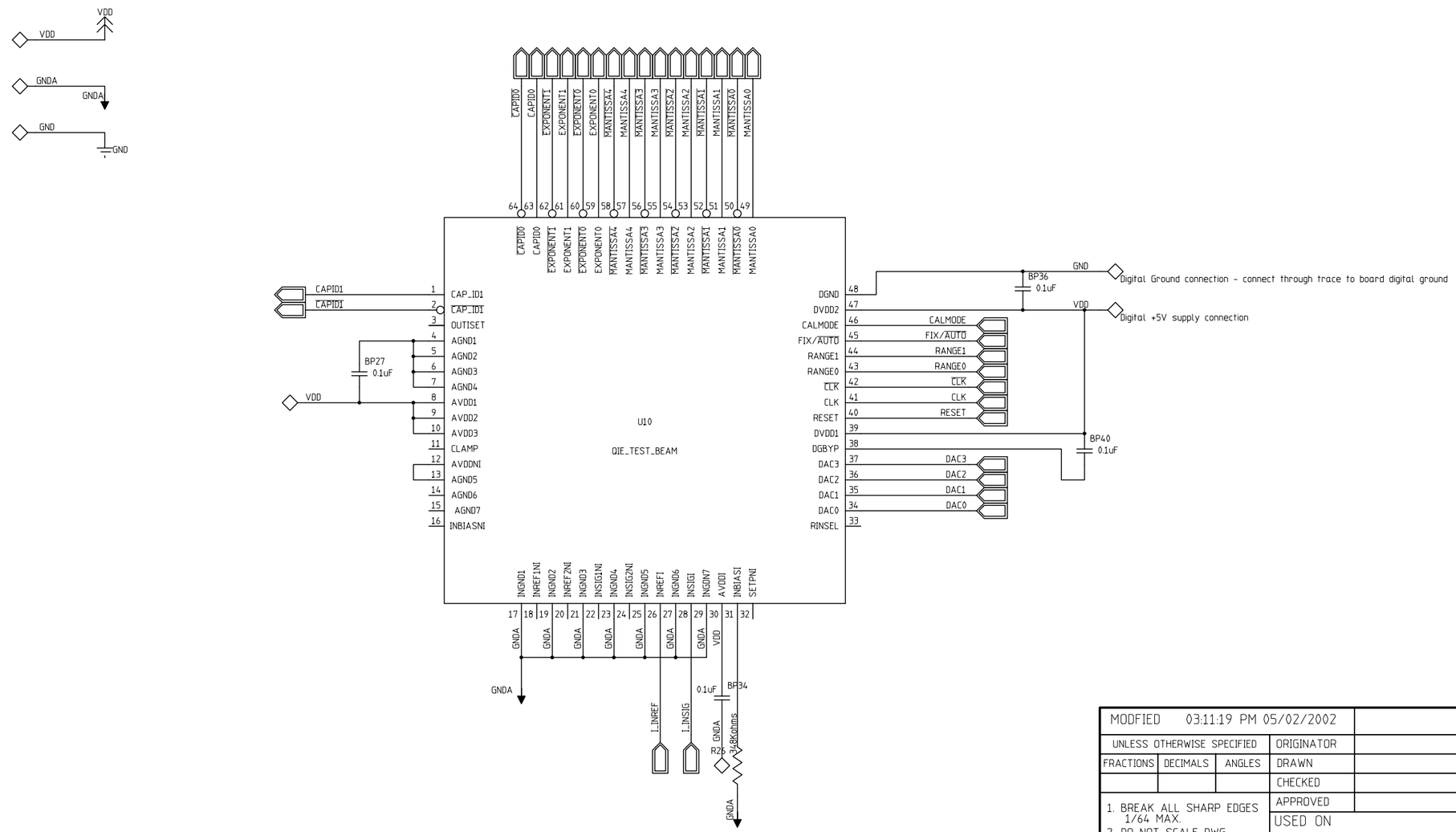

MODFIED 03:11:19 PM 05/02/2002				
UNLESS OTHERWISE SPECIFIED			ORIGINATOR	
FRACTIONS	DECIMALS	ANGLES	DRAWN	
			CHECKED	
1. BREAK ALL SHARP EDGES 1/64 MAX.			APPROVED	
2. DO NOT SCALE DWG.			USED ON	
3. DIMENSIONING IN ACCORD WITH ANSI Y14.5 STD's.				
√ MAX. ALL MACHINED SURFACES			MATERIAL	

Fermi National Accelerator Laboratory
United States Department of Energy

D:\ANGIE_WORK\QIE_HPD_6CHV2\QIE_HPD_6CH.prj

SIZE	SCALE	FILMED	DRAWING NUMBER	PAGE 01 of 01	REV
C	1:1				

H=4ND; V=4LA

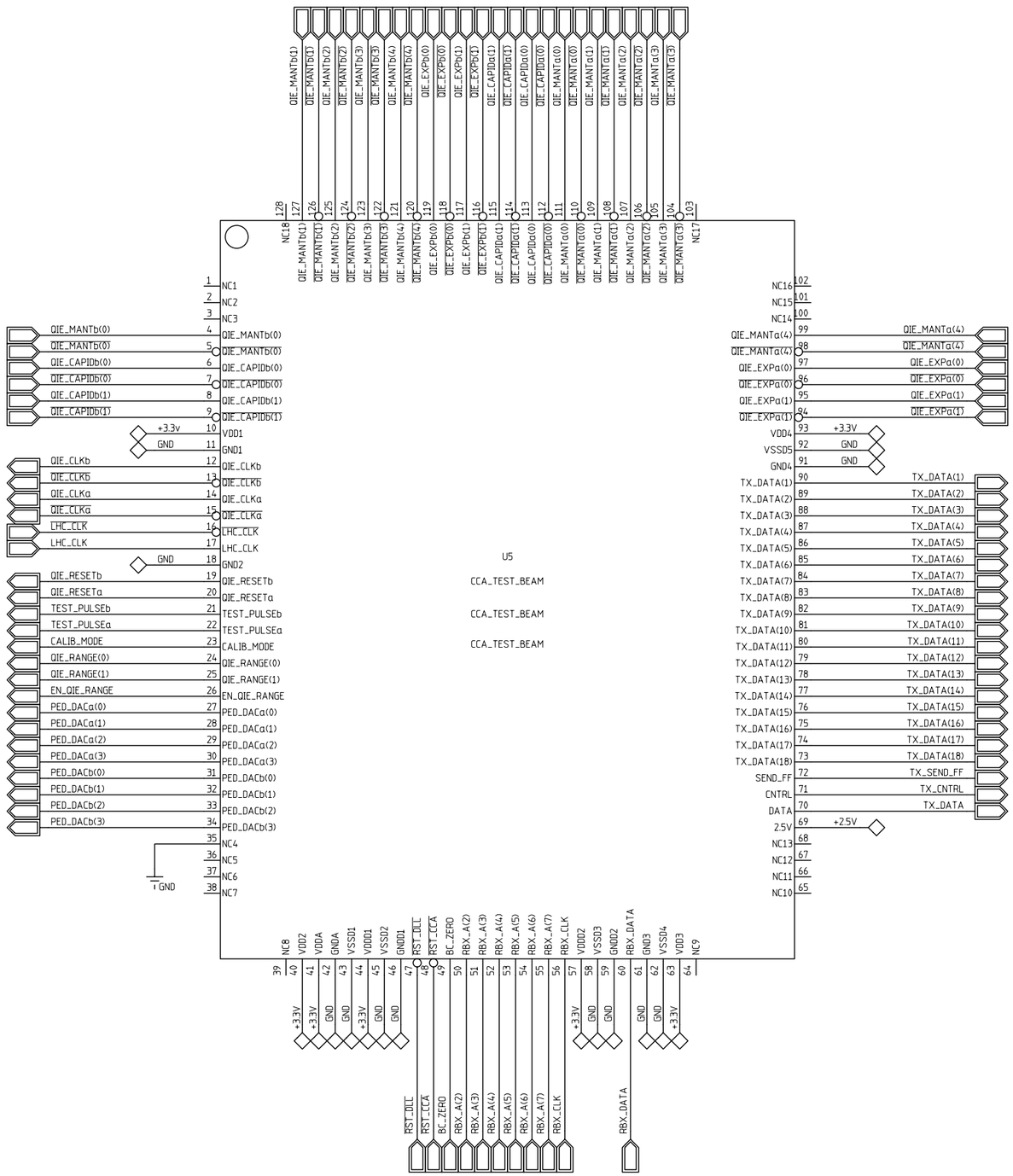

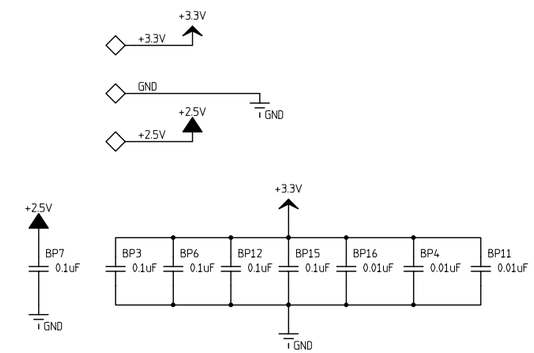

MODIFIED 09:50:13 AM 03/13/2002				
UNLESS OTHERWISE SPECIFIED			ORIGINATOR	
FRACTIONS	DECIMALS	ANGLES	DRAWN	
			CHECKED	
			APPROVED	

1. BREAK ALL SHARP EDGES 1/64 MAX.
2. DO NOT SCALE DWG.
3. DIMENSIONING IN ACCORD WITH ANSI Y14.5 STD's.

MAX. ALL MACHINED SURFACES

USED ON

MATERIAL

Fermi National Accelerator Laboratory
United States Department of Energy

D:\ANGIE_WORK\QIE_HPD_6CHV2\QIE_HPD_6CH.prj

SIZE	SCALE	FILMED	DRAWING NUMBER	PAGE 01 of 01	REV
C	1:1				

H=4ND; V=4LA