DWG. NO.	SH.	REV

REVISIONS

REV	DESCRIPTION	DATE	APPROVED

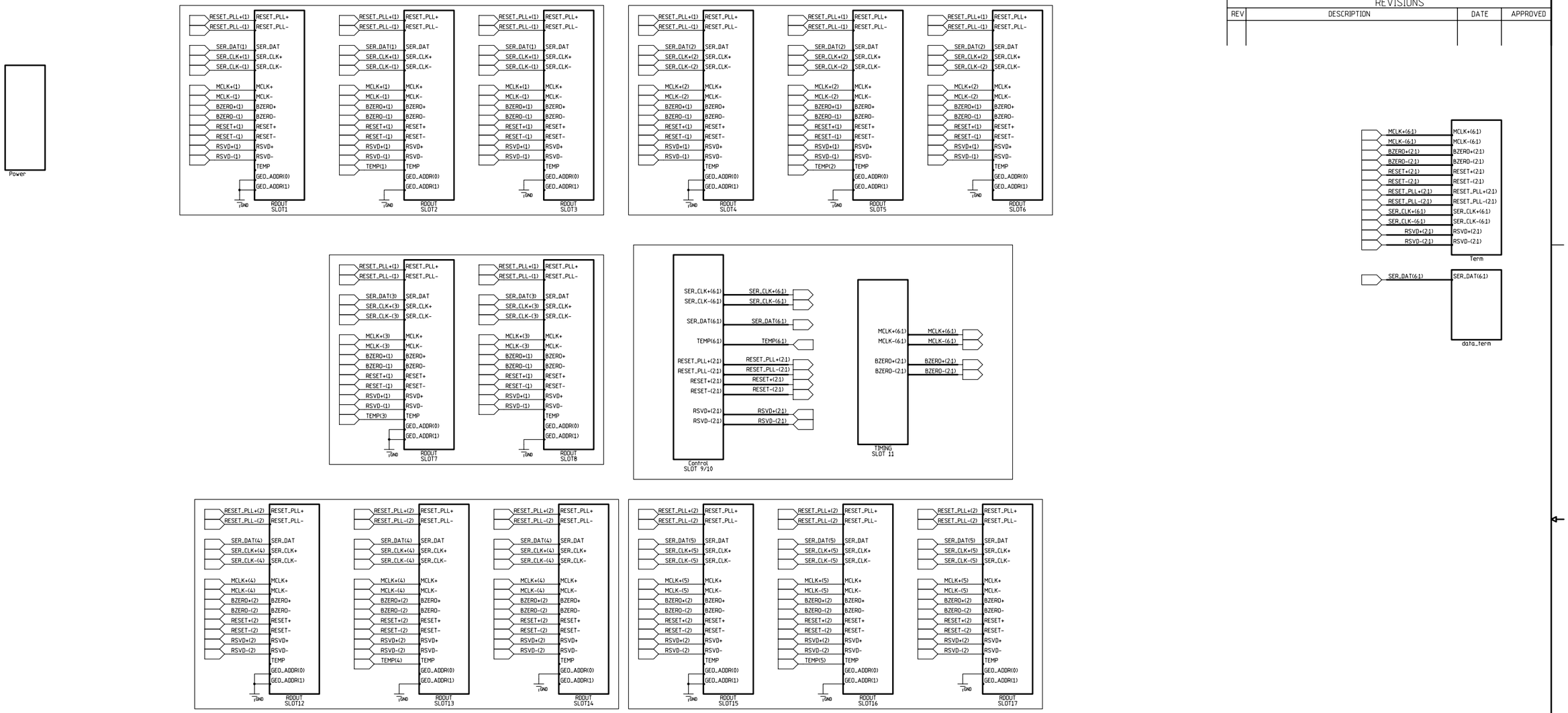

CONTRACT NO.		Fermi National Accelerator Laboratory		
APPROVALS	DATE	US CMS HCAL HB Backplane Top Level Schematic		
DRAWN T. M. Shaw	1/29/01			
CHECKED				
ISSUED		SIZE D	FSCM NO.	DWG. NO.	REV
		SCALE		SHEET

H=8ND; V=4LA

DWG. NO.	SH.	REV

REVISIONS

REV	DESCRIPTION	DATE	APPROVED

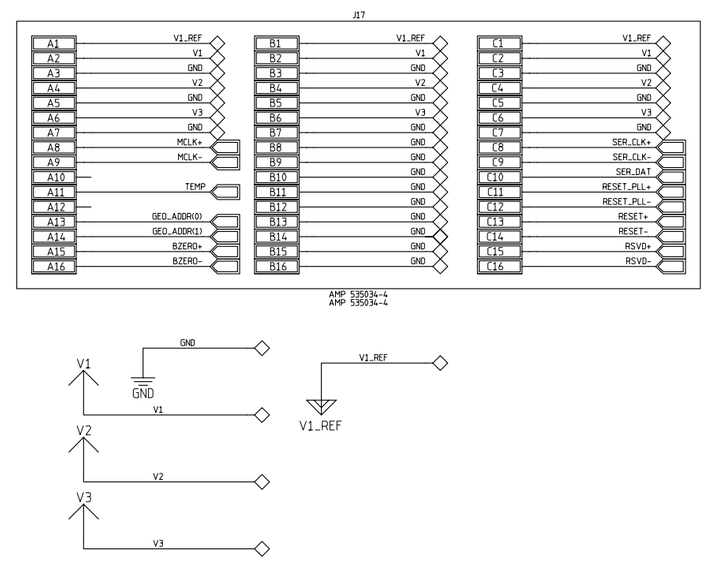

CONTRACT NO.		Fermi National Accelerator Laboratory
APPROVALS	DATE	US CMS HCAL HB Backplane Readout Card Slot
DRAWN T. M. Shaw	1/29/01	
CHECKED		
ISSUED		SIZE D / FSCM NO. / DWG. NO. / REV
		SCALE / SHEET

H=8ND, V=4LA

DWG. NO.	SH.	REV

REVISIONS

REV	DESCRIPTION	DATE	APPROVED

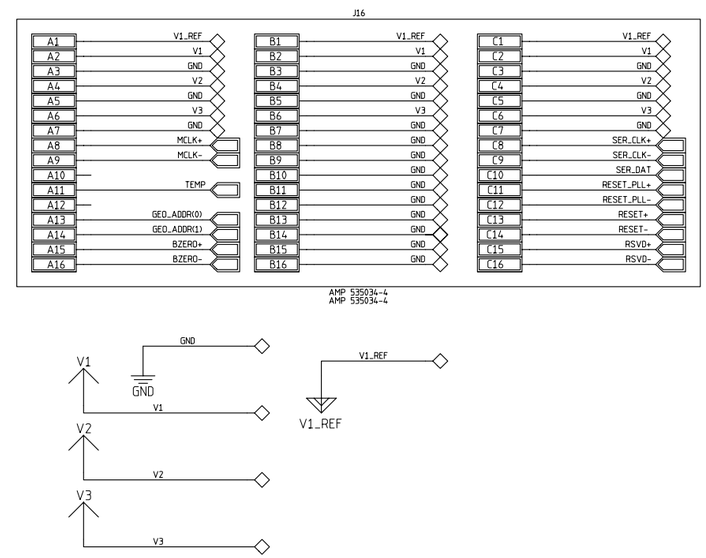

CONTRACT NO.		Fermi National Accelerator Laboratory
APPROVALS	DATE	US CMS HCAL HB Backplane Readout Card Slot
DRAWN T. M. Shaw	1/29/01	
CHECKED		
ISSUED		SIZE D / FSCM NO. / DWG. NO. / REV
		SCALE / SHEET

H=8ND, V=4LA

DWG. NO.	SH.	REV

REVISIONS

REV	DESCRIPTION	DATE	APPROVED

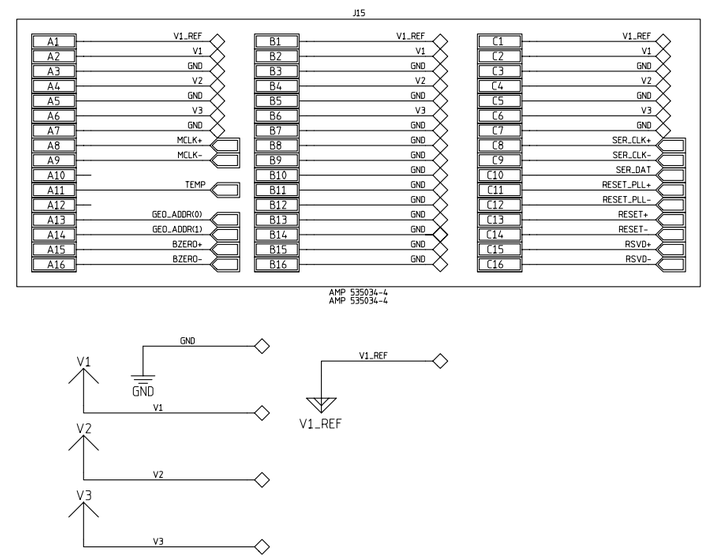

CONTRACT NO.		Fermi National Accelerator Laboratory
APPROVALS	DATE	US CMS HCAL HB Backplane Readout Card Slot
DRAWN T. M. Shaw	1/29/01	
CHECKED		
ISSUED		SIZE D / FSCM NO. / DWG. NO. / REV
		SCALE / SHEET

H=8ND, V=4LA

DWG. NO.	SH.	REV

REVISIONS

REV	DESCRIPTION	DATE	APPROVED

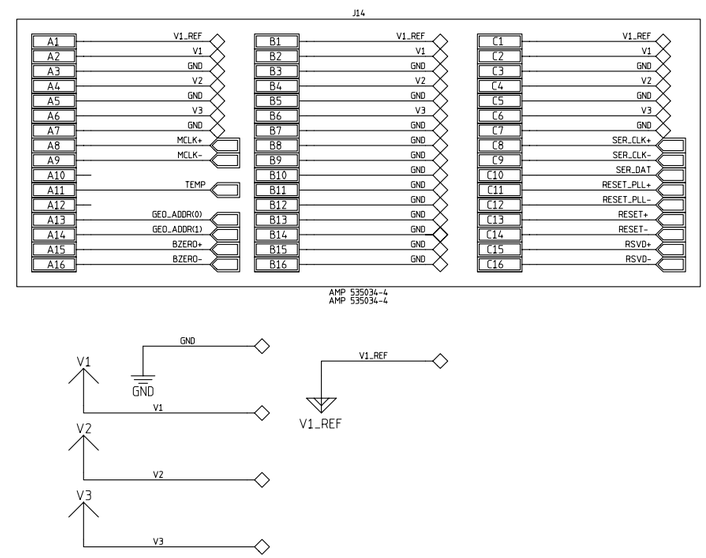

CONTRACT NO.		Fermi National Accelerator Laboratory
APPROVALS	DATE	US CMS HCAL HB Backplane Readout Card Slot
DRAWN T. M. Shaw	1/29/01	
CHECKED		
ISSUED		SIZE D / FSCM NO. / DWG. NO. / REV
		SCALE / SHEET

H=8ND, V=4LA

DWG. NO.	SH.	REV

REVISIONS

REV	DESCRIPTION	DATE	APPROVED

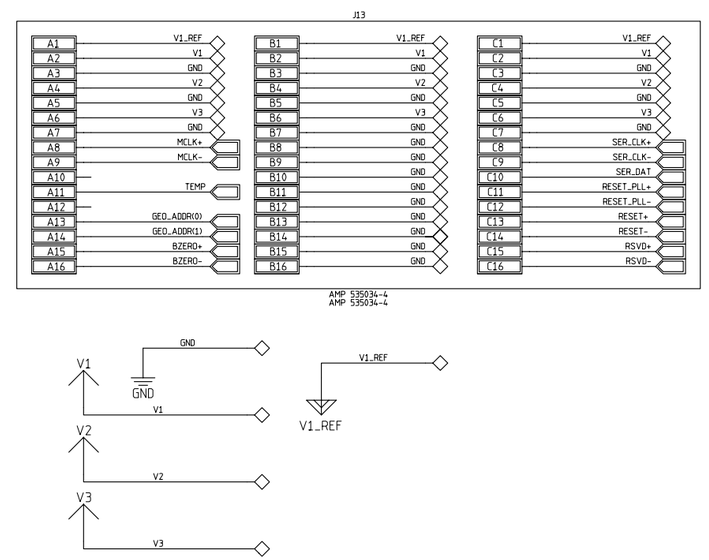

CONTRACT NO.		Fermi National Accelerator Laboratory
APPROVALS	DATE	US CMS HCAL HB Backplane Readout Card Slot
DRAWN T. M. Shaw	1/29/01	
CHECKED		
ISSUED		SIZE D / FSCM NO. / DWG. NO. / REV
		SCALE / SHEET

H=8ND, V=4LA

DWG. NO.	SH.	REV

REVISIONS

REV	DESCRIPTION	DATE	APPROVED

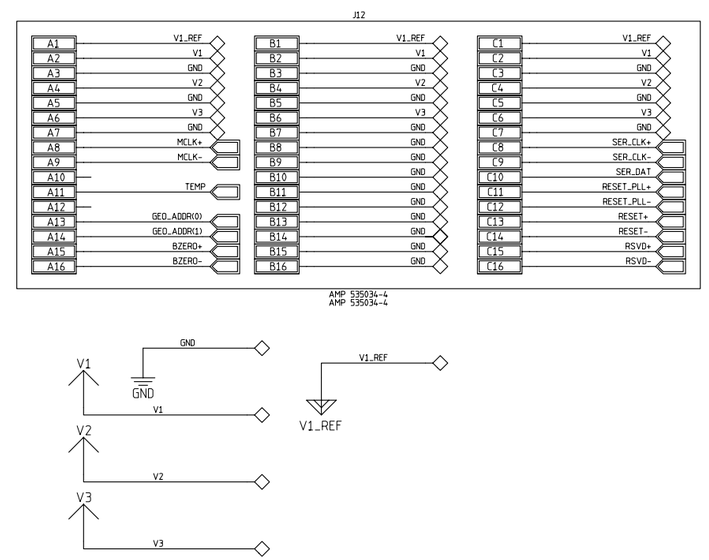

CONTRACT NO.		Fermi National Accelerator Laboratory
APPROVALS	DATE	US CMS HCAL HB Backplane Readout Card Slot
DRAWN T. M. Shaw	1/29/01	
CHECKED		
ISSUED		SIZE D / FSCM NO. / DWG. NO. / REV
		SCALE / SHEET

H=8ND, V=4LA

DWG. NO.	SH.	REV

REVISIONS

REV	DESCRIPTION	DATE	APPROVED

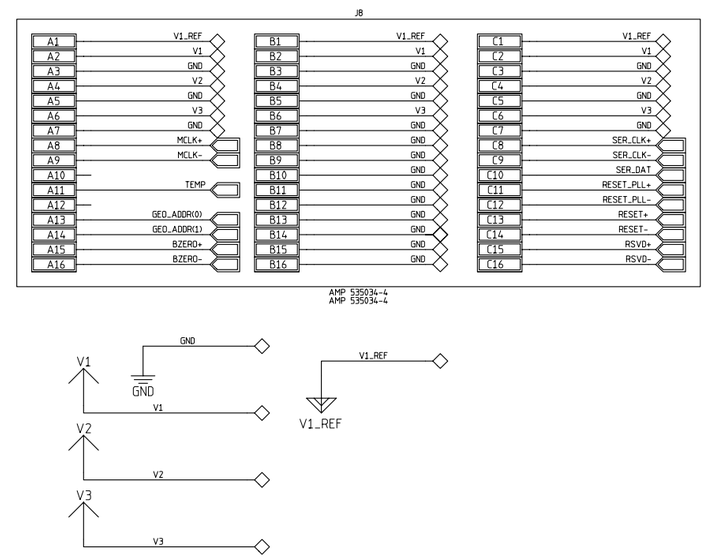

CONTRACT NO.		Fermi National Accelerator Laboratory
APPROVALS	DATE	US CMS HCAL HB Backplane Readout Card Slot
DRAWN T. M. Shaw	1/29/01	
CHECKED		
ISSUED		SIZE D / FSCM NO. / DWG. NO. / REV
		SCALE / SHEET

H=8ND, V=4LA

DWG. NO.	SH.	REV

REVISIONS

REV	DESCRIPTION	DATE	APPROVED

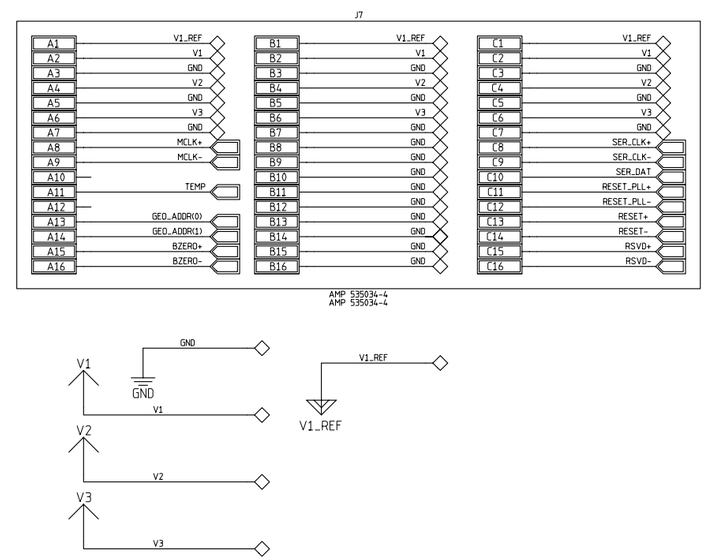

CONTRACT NO.		Fermi National Accelerator Laboratory
APPROVALS	DATE	US CMS HCAL HB Backplane Readout Card Slot
DRAWN T. M. Shaw	1/29/01	
CHECKED		
ISSUED		SIZE D / FSCM NO. / DWG. NO. / REV
		SCALE / SHEET

H=8ND, V=4LA

DWG. NO.	SH.	REV

REVISIONS

REV	DESCRIPTION	DATE	APPROVED

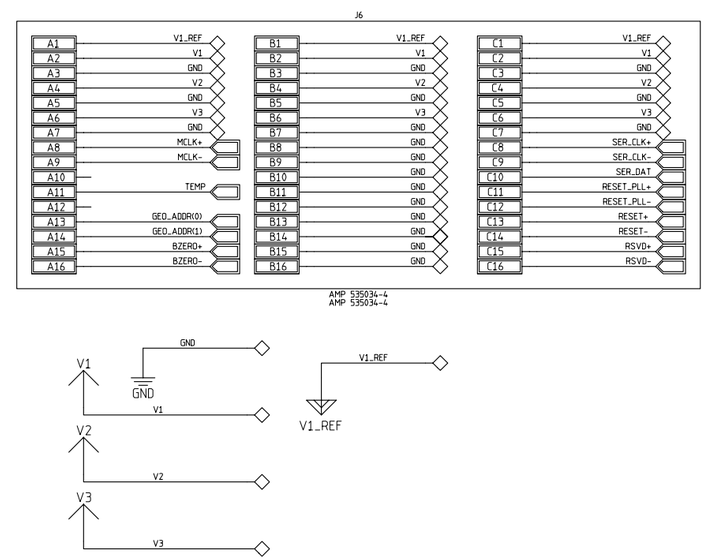

CONTRACT NO.		Fermi National Accelerator Laboratory
APPROVALS	DATE	US CMS HCAL HB Backplane Readout Card Slot
DRAWN T. M. Shaw	1/29/01	
CHECKED		
ISSUED		SIZE D / FSCM NO. / DWG. NO. / REV
		SCALE / SHEET

H=8ND, V=4LA

DWG. NO.	SH.	REV

REVISIONS

REV	DESCRIPTION	DATE	APPROVED

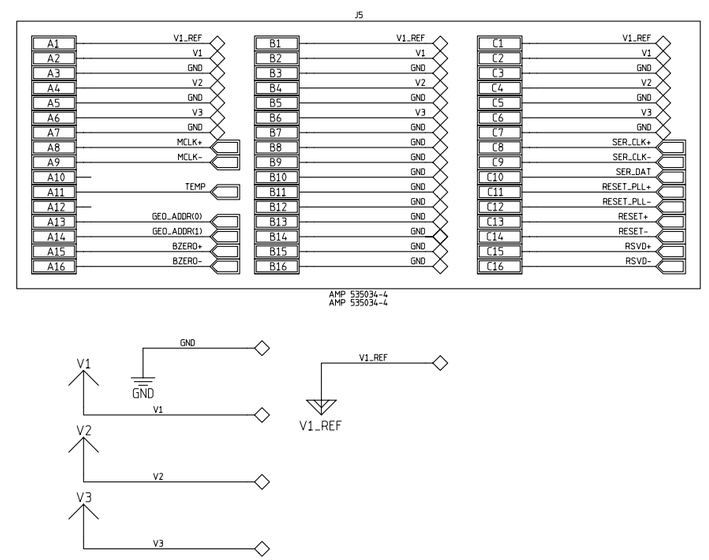

CONTRACT NO.		Fermi National Accelerator Laboratory
APPROVALS	DATE	US CMS HCAL HB Backplane Readout Card Slot
DRAWN T. M. Shaw	1/29/01	
CHECKED		
ISSUED		SIZE D / FSCM NO. / DWG. NO. / REV
		SCALE / SHEET

H=8ND, V=4LA

DWG. NO.	SH.	REV

REVISIONS

REV	DESCRIPTION	DATE	APPROVED

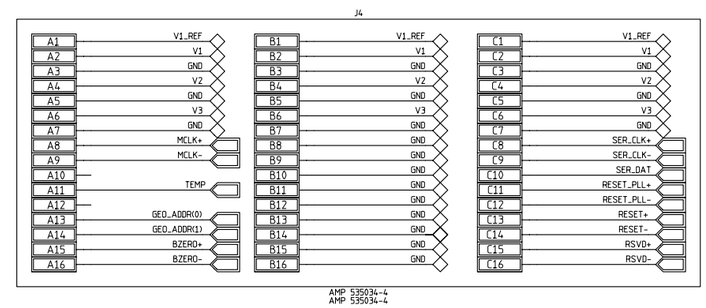

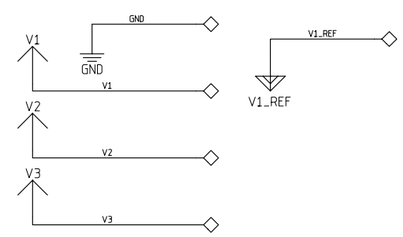

CONTRACT NO.		Fermi National Accelerator Laboratory
APPROVALS	DATE	US CMS HCAL HB Backplane Readout Card Slot
DRAWN T. M. Shaw	1/29/01	
CHECKED		
ISSUED		SIZE D / FSCM NO. / DWG. NO. / REV
		SCALE / SHEET

H=8ND, V=4LA

DWG. NO.	SH.	REV

REVISIONS

REV	DESCRIPTION	DATE	APPROVED

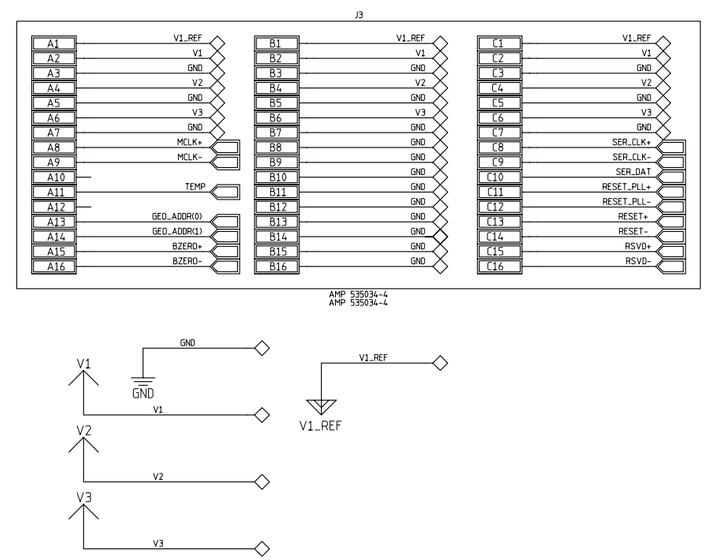

CONTRACT NO.		Fermi National Accelerator Laboratory
APPROVALS	DATE	US CMS HCAL HB Backplane Readout Card Slot
DRAWN T. M. Shaw	1/29/01	
CHECKED		
ISSUED		SIZE D / FSCM NO. / DWG. NO. / REV
		SCALE / SHEET

H=8ND, V=4LA

DWG. NO.	SH.	REV

REVISIONS

REV	DESCRIPTION	DATE	APPROVED

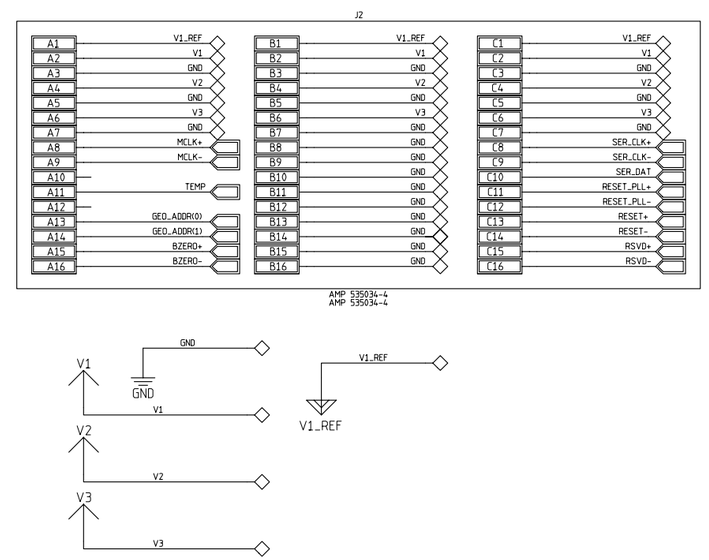

CONTRACT NO.		Fermi National Accelerator Laboratory
APPROVALS	DATE	US CMS HCAL HB Backplane Readout Card Slot
DRAWN T. M. Shaw	1/29/01	
CHECKED		
ISSUED		SIZE D / FSCM NO. / DWG. NO. / REV
		SCALE / SHEET

H=8ND, V=4LA

DWG. NO.	SH.	REV

REVISIONS

REV	DESCRIPTION	DATE	APPROVED

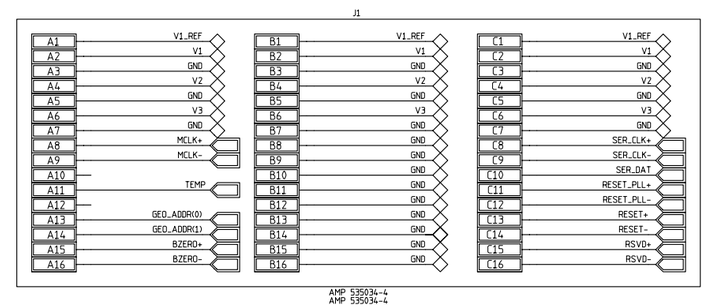

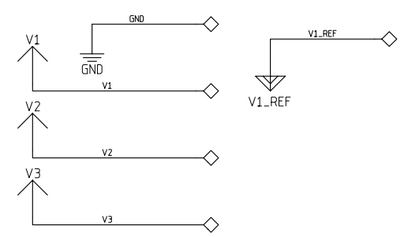

CONTRACT NO.		Fermi National Accelerator Laboratory
APPROVALS	DATE	US CMS HCAL HB Backplane Readout Card Slot
DRAWN T. M. Shaw	1/29/01	
CHECKED		
ISSUED		SIZE D / FSCM NO. / DWG. NO. / REV
		SCALE / SHEET

H=8ND, V=4LA

DWG. NO.	SH.	REV

REVISIONS

REV	DESCRIPTION	DATE	APPROVED

SLOT 9

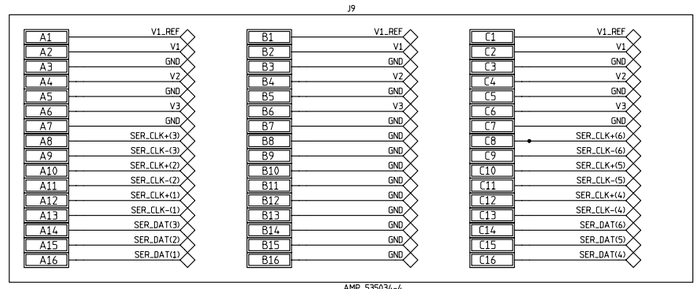

SLOT 10

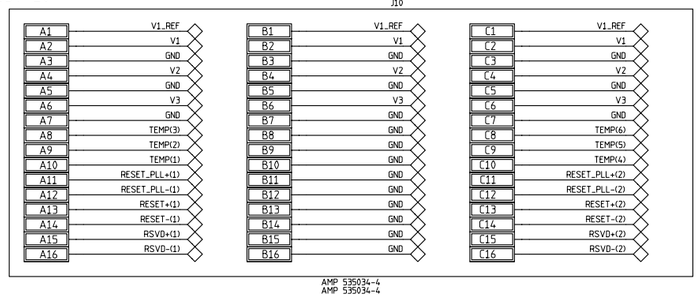

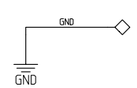

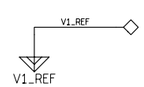

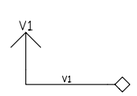

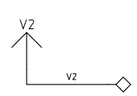

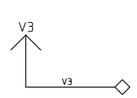

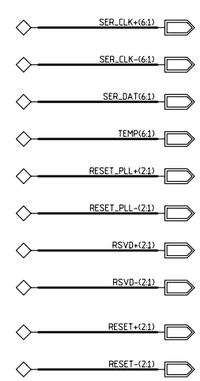

CONTRACT NO.		Fermi National Accelerator Laboratory
APPROVALS	DATE	US CMS HCAL SLOTS 7 and 8 HB Backplane Clock and Control Module Slot - Control
DRAWN T. M. Shaw	1/29/01	
CHECKED		
ISSUED		SIZE D / FSCM NO. / DWG. NO. / REV
		SCALE / SHEET

H=8ND; V=4LA

DWG. NO.	SH.	REV

REVISIONS

REV	DESCRIPTION	DATE	APPROVED

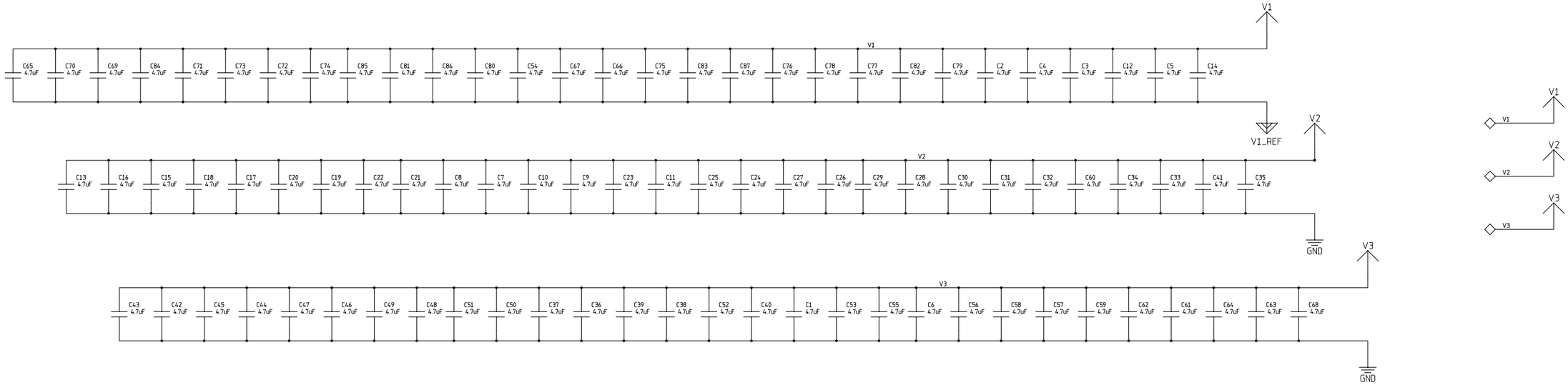

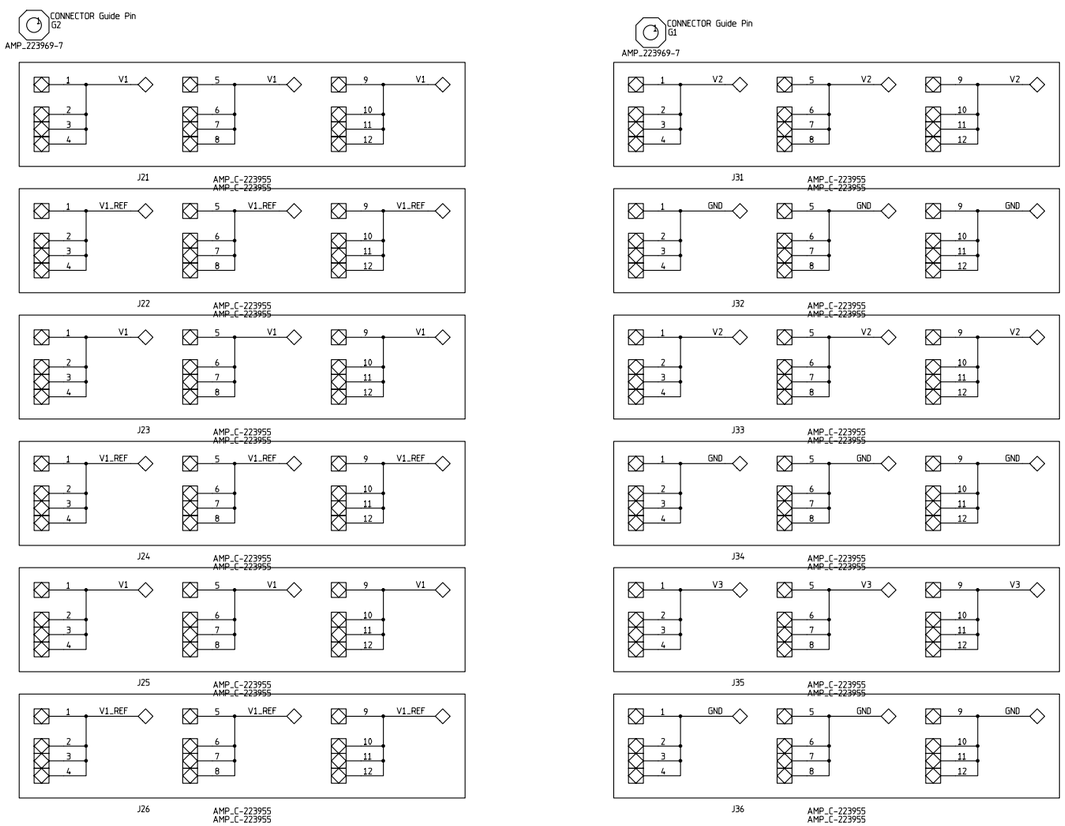

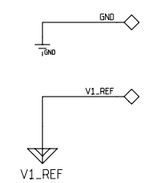

CONTRACT NO.		Fermi National Accelerator Laboratory
APPROVALS	DATE	US CMS HCAL HB Backplane Low Voltage Power Slot
DRAWN T. M. Shaw	1/29/01	
CHECKED		
ISSUED		SIZE D / FSCM NO. / DWG. NO. / REV
		SCALE / SHEET

H=BND, V=4LA

DWG. NO.	SH.	REV

REVISIONS

REV	DESCRIPTION	DATE	APPROVED

SLOT 11

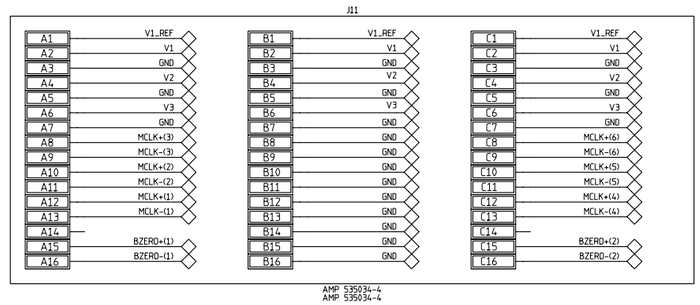

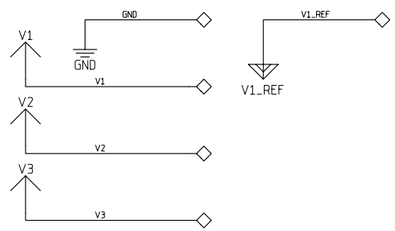

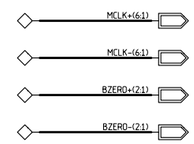

CONTRACT NO.		Fermi National Accelerator Laboratory			
APPROVALS	DATE	US CMS HCAL HB Backplane Clock and Control Module Slot - Timing		SLOT 9	
DRAWN T. M. Shaw	1/29/01				
CHECKED					
ISSUED		SIZE D	FSCM NO.	DWG. NO.	REV
		SCALE		SHEET	

H=BND, V=4LA

DWG. NO.	SH.	REV

REVISIONS

REV	DESCRIPTION	DATE	APPROVED

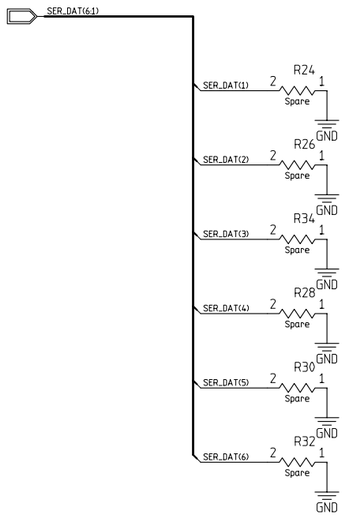

CONTRACT NO.		Fermi National Accelerator Laboratory			
APPROVALS	DATE	US CMS HCAL HB Backplane Data Terminations			
DRAWN T. M. Shaw	1/29/01				
CHECKED					
ISSUED		SIZE D	FSCM NO.	DWG. NO.	REV
		SCALE		SHEET	

H=BND, V=4LA

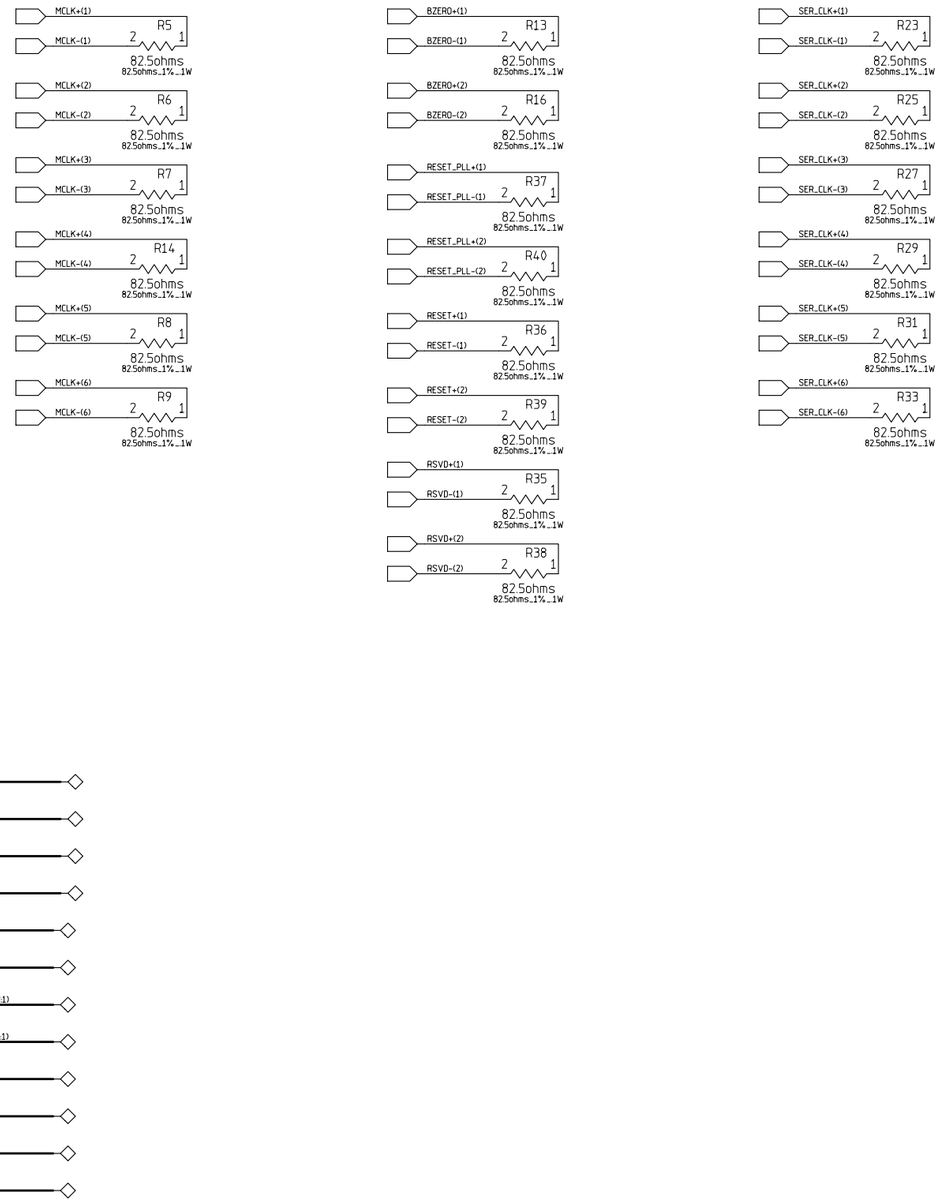

DWG. NO.	SH.	REV

REVISIONS

REV	DESCRIPTION	DATE	APPROVED

CONTRACT NO.	Fermi National Accelerator Laboratory
APPROVALS / DATE	US CMS HCAL HB Backplane Clock Terminations
DRAWN T. M. Shaw 1/29/01	
CHECKED	
ISSUED	SIZE D / FSCM NO. / DWG. NO. / REV
	SCALE / SHEET

H=BND; V=4LA