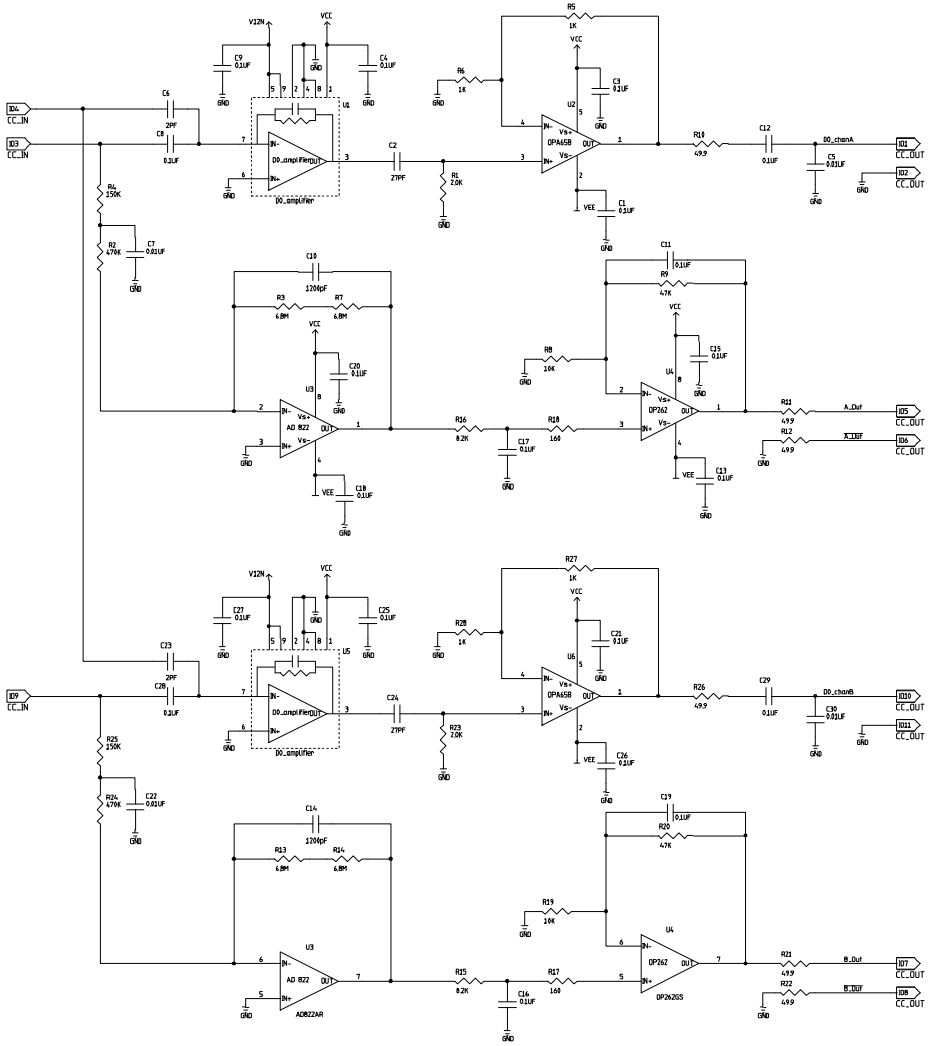

DWG. NO.	SH.	REV

REVISIONS

REV	DESCRIPTION	DATE	APPROVED

CONTRACT NO.		Fermi National Accelerator Laboratory
APPROVALS	DATE	CMS D0 Certified Circuit Amp
DRAWN T. Wesson	11/16/99	
CHECKED		
ISSUED		SIZE D · FSCM NO. · DWG. NO. TRW-CMS-D0CARD-111699 · REV
		SCALE · Date: 12/13/99 · PAGE 01