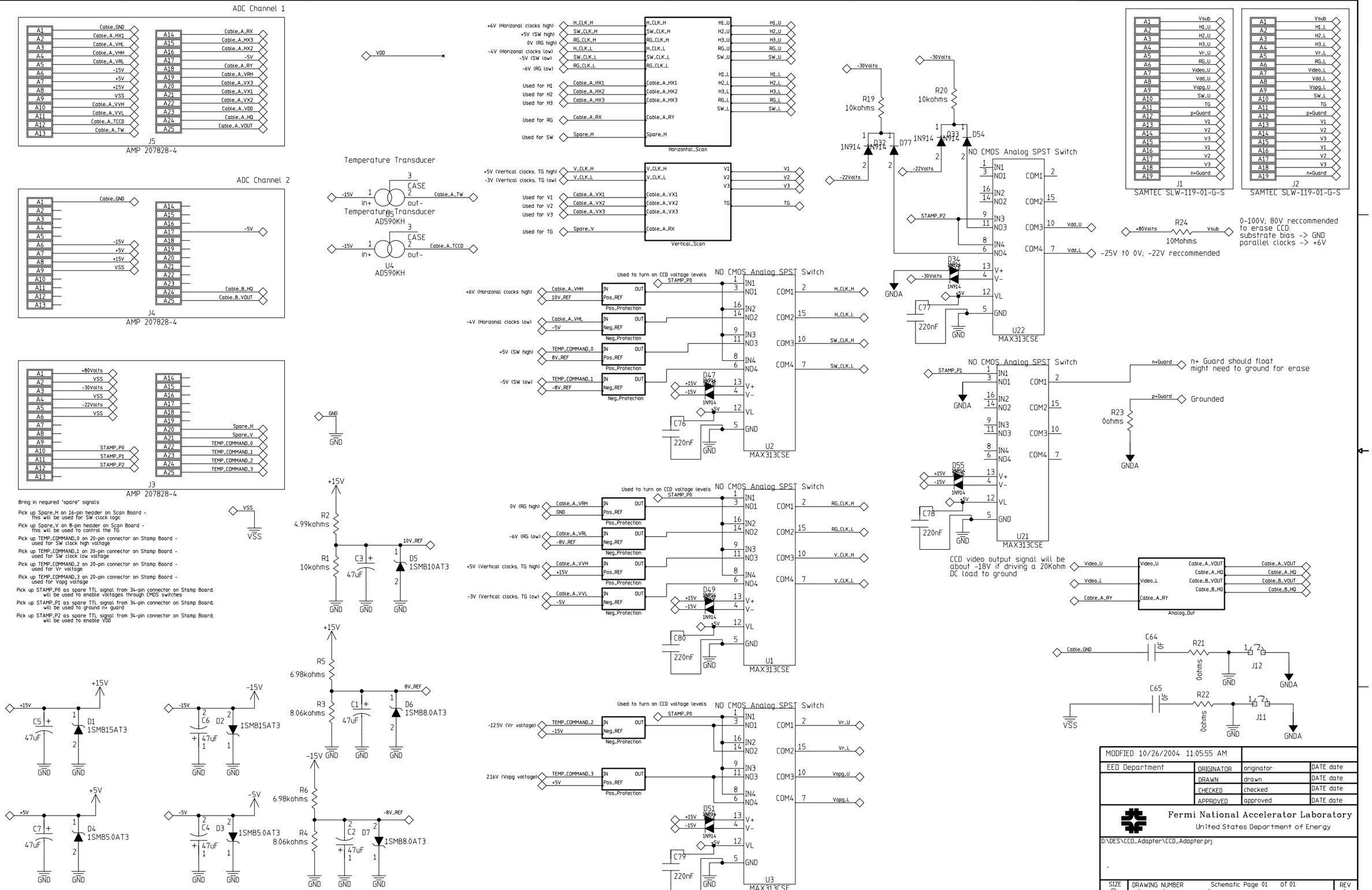
ADC Channel 1
J5
AMP 207828-4
ADC Channel 2
J4
AMP 207828-4
J3
AMP 207828-4
Bring in required "spare" signals
Pick up Spare_H on 16-pin header on Scan Board - this will be used for SW clock logic
Pick up Spare_V on 8-pin header on Scan Board - this will be used to control the TG
Pick up TEMP_COMMAND_0 on 20-pin connector on Stamp Board - used for SW clock high voltage
Pick up TEMP_COMMAND_1 on 20-pin connector on Stamp Board - used for SW clock low voltage
Pick up TEMP_COMMAND_2 on 20-pin connector on Stamp Board - used for Vr voltage
Pick up TEMP_COMMAND_3 on 20-pin connector on Stamp Board - used for Vopg voltage
Pick up STAMP_P0 as spare TTL signal from 34-pin connector on Stamp Board; will be used to enable voltages through CMOS switches
Pick up STAMP_P1 as spare TTL signal from 34-pin connector on Stamp Board; will be used to ground n+ guard
Pick up STAMP_P2 as spare TTL signal from 34-pin connector on Stamp Board; will be used to enable VDD
Temperature Transducer
U5
AD590KH
U4
AD590KH
Horizontal_Scan
Vertical_Scan
NO CMOS Analog SPST Switch
U22
MAX313CSE
U2
MAX313CSE
U21
MAX313CSE
U1
MAX313CSE
U3
MAX313CSE
Pos_Protection
Neg_Protection
Used to turn on CCD voltage levels
J1
SAMTEC SLW-119-01-G-S
J2
SAMTEC SLW-119-01-G-S
R24
10Mohms
0-100V; 80V reccommended to erase CCD: substrate bias -> GND parallel clocks -> +6V
-25V t0 0V; -22V reccommended
n+ Guard should float might need to ground for erase
Grounded
CCD video output signal will be about -18V if driving a 20Kohm DC load to ground
Analog_Out
J12
J11
MODIFIED 10/26/2004 11:05:55 AM
EED Department
ORIGINATOR
DRAWN
CHECKED
APPROVED
Fermi National Accelerator Laboratory
United States Department of Energy
D:\DES\CCD_Adapter\CCD_Adapter.prj
SIZE D
DRAWING NUMBER drawing number
Schematic Page 01 of 01
REV A

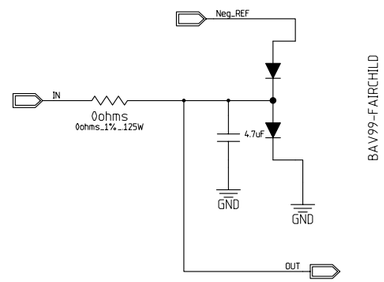

MODFIED 9/29/2004 9:54:51 AM			
EED Department	ORIGINATOR	originator	DATE date
	DRAWN	drawn	DATE date
	CHECKED	checked	DATE date
	APPROVED	approved	DATE date

Fermi National Accelerator Laboratory
United States Department of Energy

D:\DES\CCD_Adapter\CCD_Adapter.prj

SIZE	DRAWING NUMBER	REV
D	drawing number Schematic Page 01 of 01	A

H=BND, V=4LA

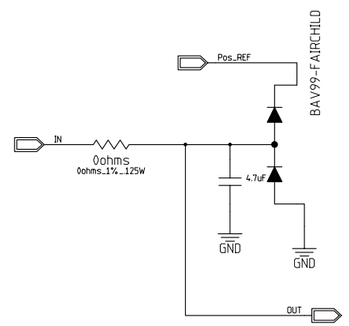

MODFIED 9/29/2004 9:51:00 AM			
EED Department	ORIGINATOR	originator	DATE date
	DRAWN	drawn	DATE date
	CHECKED	checked	DATE date
	APPROVED	approved	DATE date

Fermi National Accelerator Laboratory
United States Department of Energy

D:\DES\CCD_Adapter\CCD_Adapter.prj

SIZE	DRAWING NUMBER	REV
D	drawing number (Schematic Page 01 of 01)	A

H=BND, V=4LA

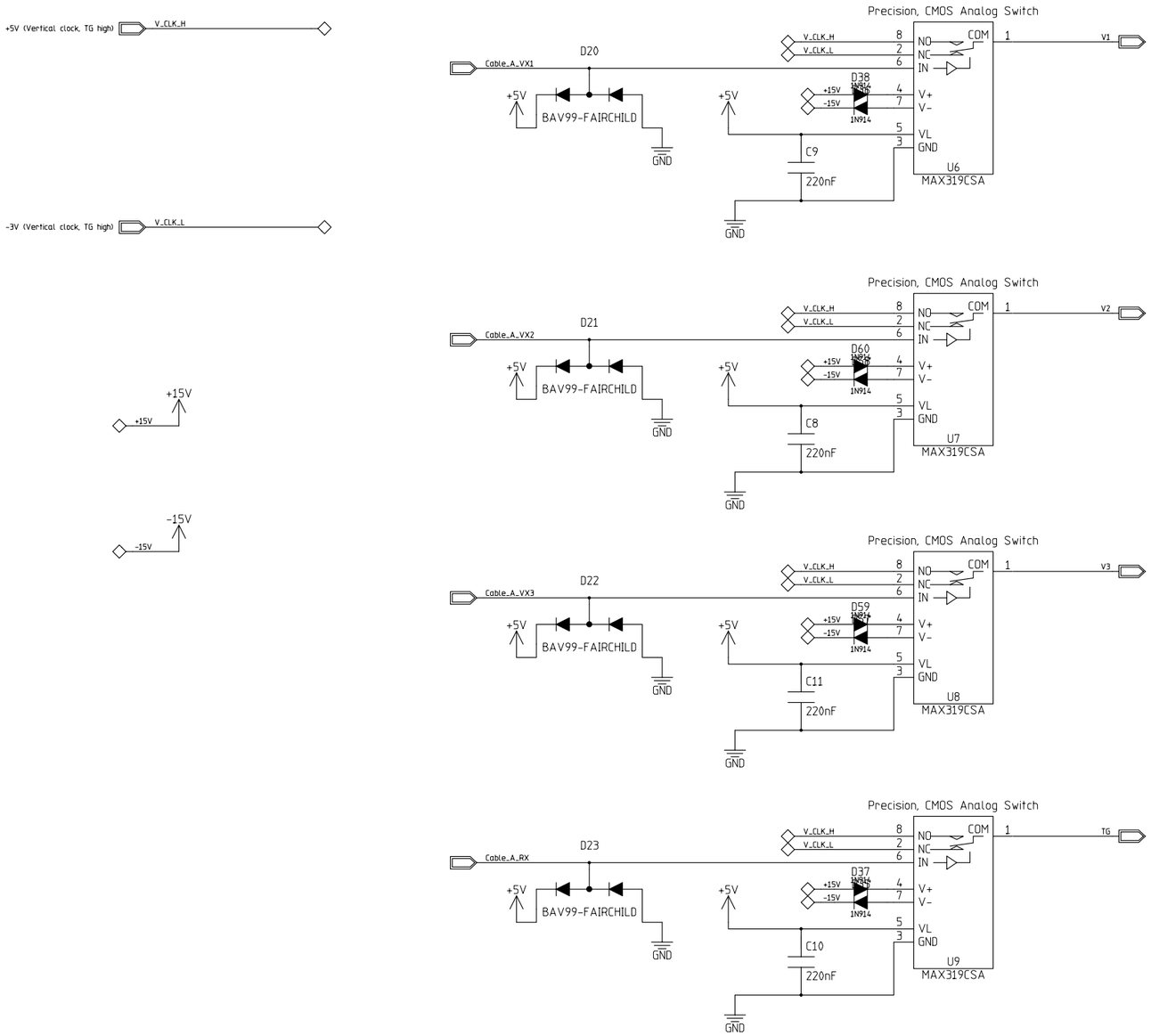

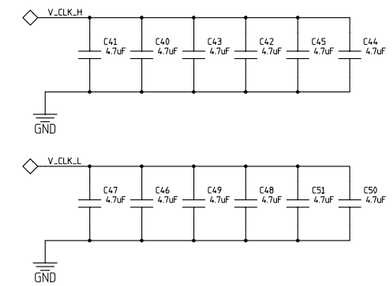

MODFIED 10/27/2004 10:18:49 AM			
EED Department	ORIGINATOR	originator	DATE date
	DRAWN	drawn	DATE date
	CHECKED	checked	DATE date
	APPROVED	approved	DATE date

Fermi National Accelerator Laboratory
United States Department of Energy

D:\DES\CCD_Adapter\CCD_Adapter.prj

SIZE	DRAWING NUMBER	REV
D	drawing number (Schematic Page 01 of 01)	A

H=BND; V=4LA

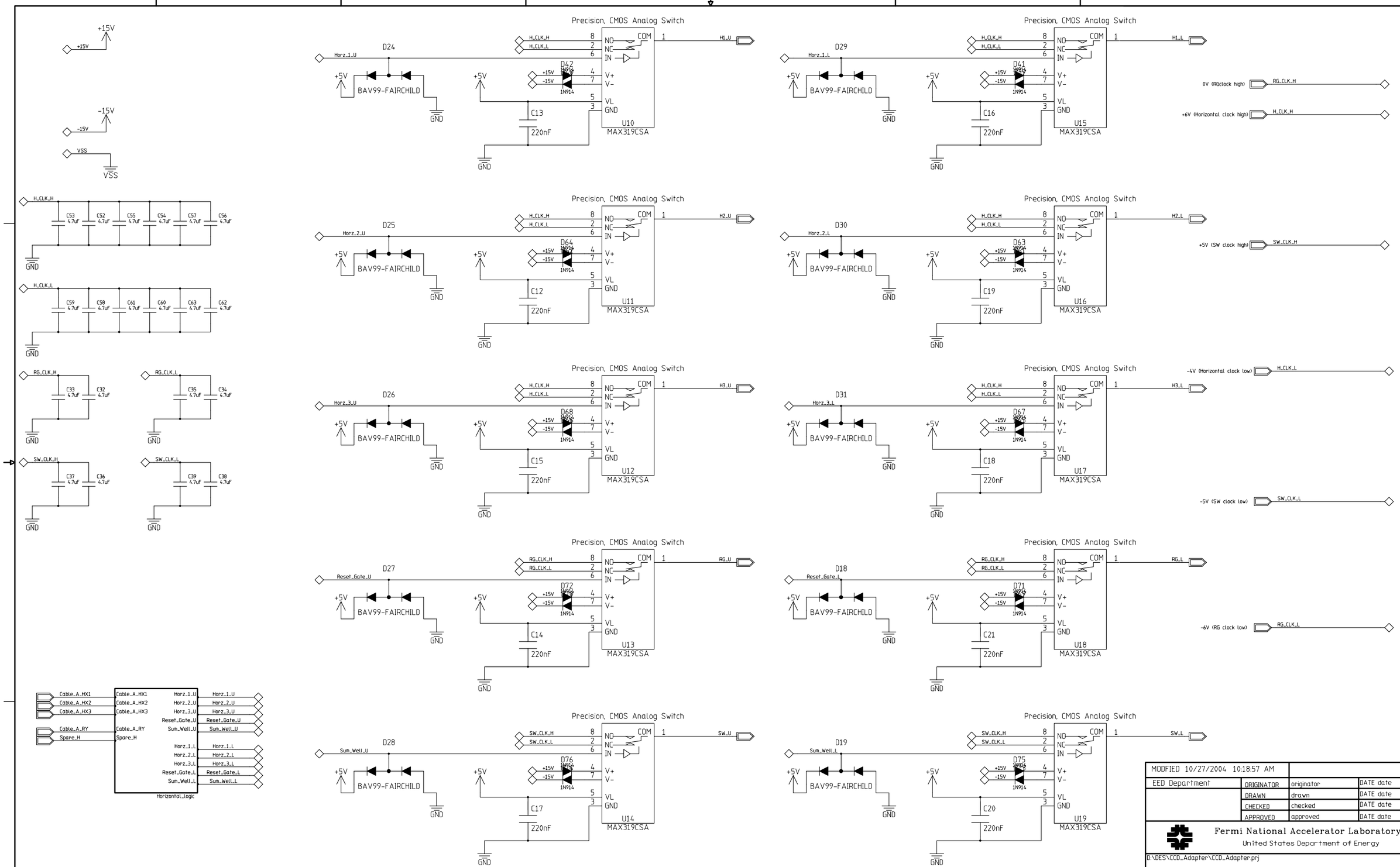

MODFIED 10/27/2004 10:18:57 AM			
EED Department	ORIGINATOR	originator	DATE date
	DRAWN	drawn	DATE date
	CHECKED	checked	DATE date
	APPROVED	approved	DATE date

Fermi National Accelerator Laboratory
United States Department of Energy

D:\DES\CCD_Adapter\CCD_Adapter.prj

SIZE	DRAWING NUMBER	REV
D	drawing number (Schematic Page 01 of 01)	A

H=BND; V=4LA

We must create ENABLE(1:0) - they indicate
type of scan:
0 - L amplifier readout
1- U amplifier readout
2 - dual L/U readout
3- no readout

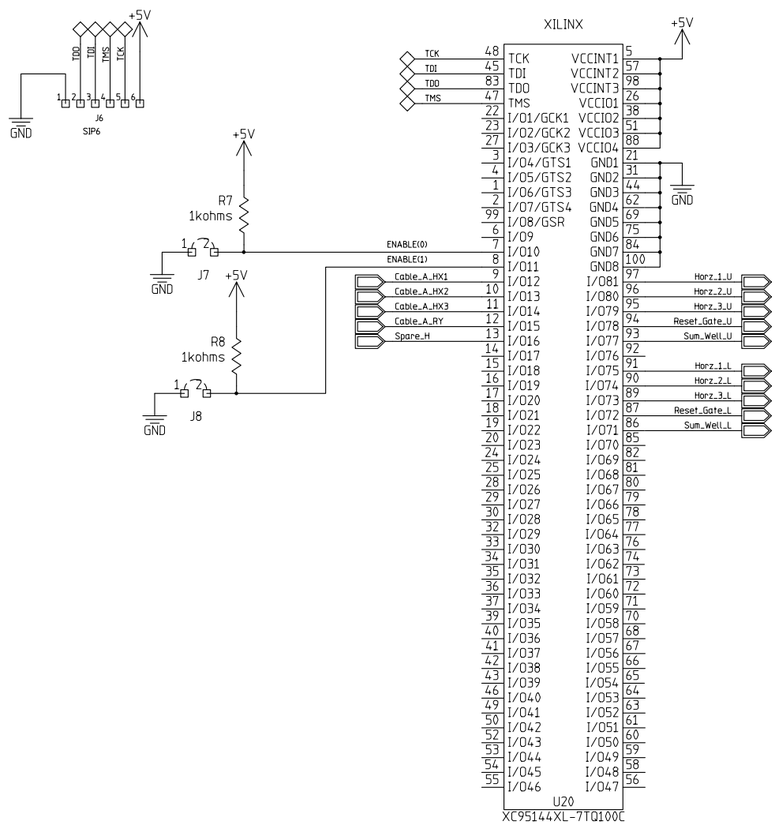

MODFIED 10/27/2004 10:19:00 AM			
EED Department	ORIGINATOR	originator	DATE date
	DRAWN	drawn	DATE date
	CHECKED	checked	DATE date
	APPROVED	approved	DATE date

Fermi National Accelerator Laboratory
United States Department of Energy

D:\DES\CCD_Adapter\CCD_Adapter.prj

SIZE	DRAWING NUMBER	REV
D	drawing number (Schematic Page 01 of 01)	A

H=BND. V=4LA