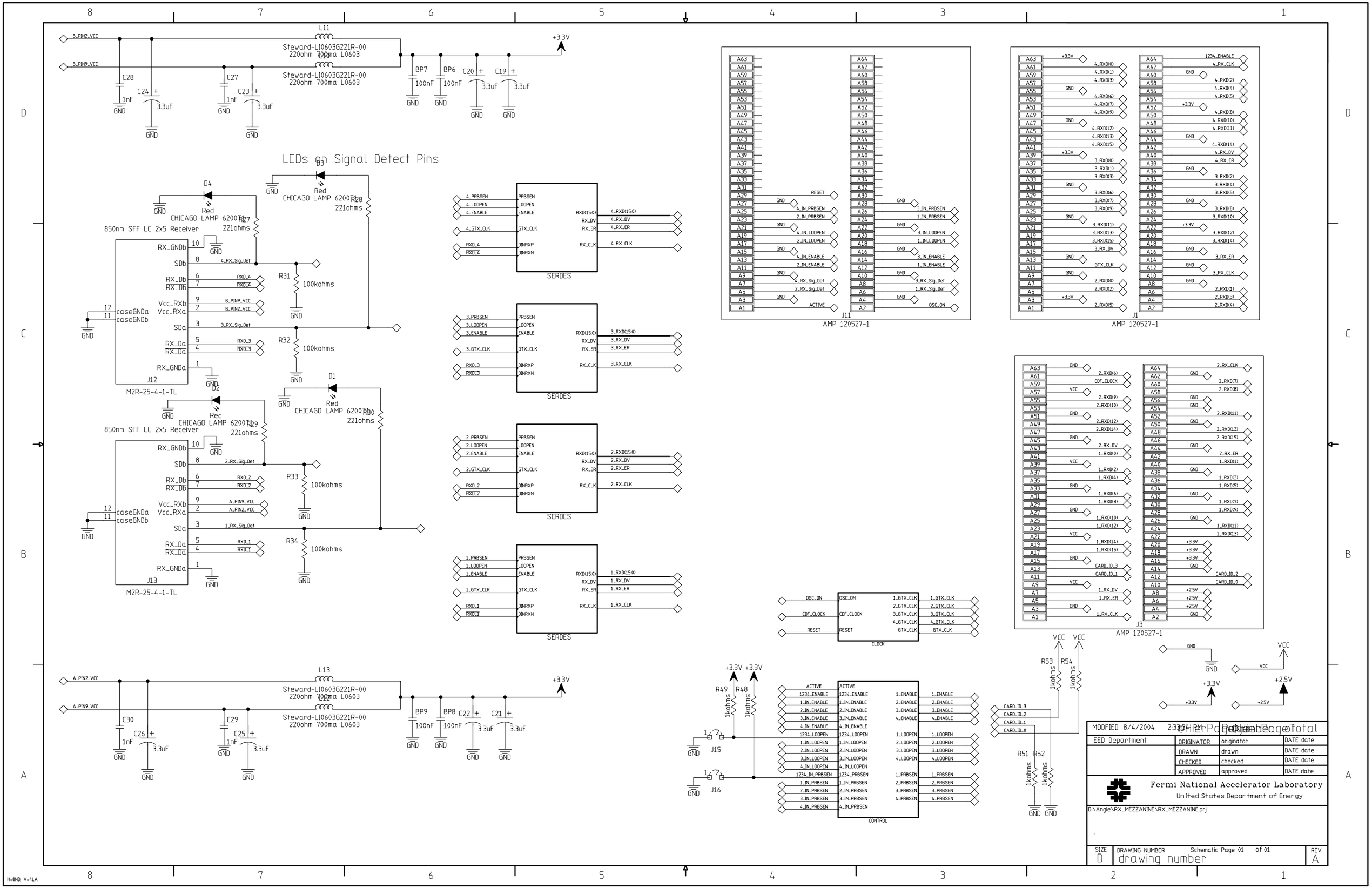
LEDs on Signal Detect Pins
850nm SFF LC 2x5 Receiver
M2R-25-4-1-TL
J12
J13
J11
J1
J3
J15
J16
AMP 120527-1
SERDES
CLOCK
CONTROL
Steward-LI0603G221R-00
220ohm 700ma L0603
CHICAGO LAMP 6200T1
Red
+3.3V
+2.5V
GND
MODFIED 8/4/2004
EED Department
ORIGINATOR originator DATE date
DRAWN drawn DATE date
CHECKED checked DATE date
APPROVED approved DATE date
Fermi National Accelerator Laboratory
United States Department of Energy
D:\Angie\RX_MEZZANINE\RX_MEZZANINE.prj
SIZE D
DRAWING NUMBER drawing number
Schematic Page 01 of 01
REV A

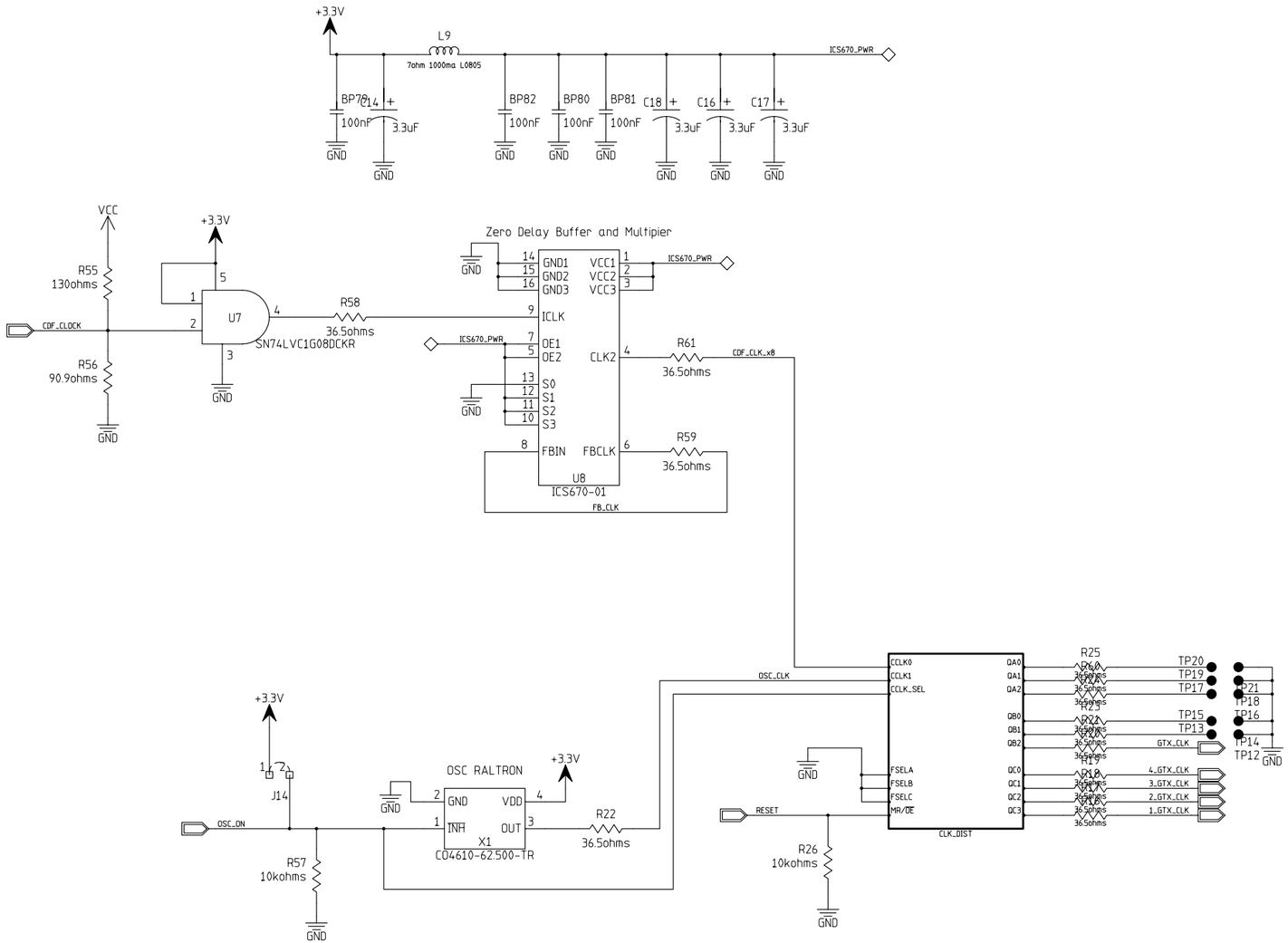

MODFIED 7/30/2004 11:20:44 AM			
EED Department	ORIGINATOR	originator	DATE date
	DRAWN	drawn	DATE date
	CHECKED	checked	DATE date
	APPROVED	approved	DATE date

Fermi National Accelerator Laboratory
United States Department of Energy

D:\Angie\RX_MEZZANINE\RX_MEZZANINE.prj

SIZE	DRAWING NUMBER	REV
D	drawing number	A

Schematic Page 01 of 01

H=8ND; V=4LA

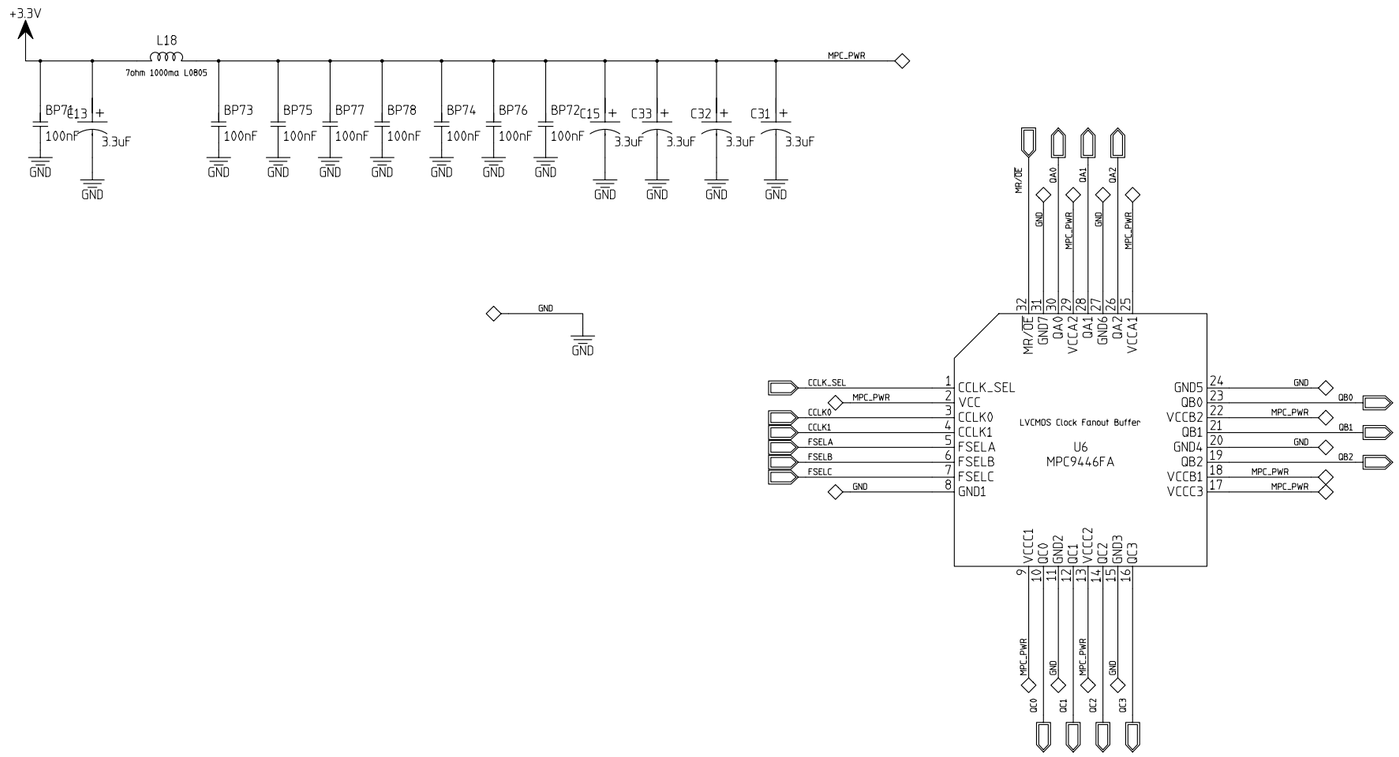

MODFIED 7/30/2004 11:28:43 AM	Chief Page Number Page Total		
EED Department	ORIGINATOR	originator	DATE date
	DRAWN	drawn	DATE date
	CHECKED	checked	DATE date
	APPROVED	approved	DATE date

Fermi National Accelerator Laboratory
United States Department of Energy

D:\Angie\RX_MEZZANINE\RX_MEZZANINE.prj

SIZE	DRAWING NUMBER	Schematic Page 01 of 01	REV
D	drawing number		A

H=8ND; V=4LA

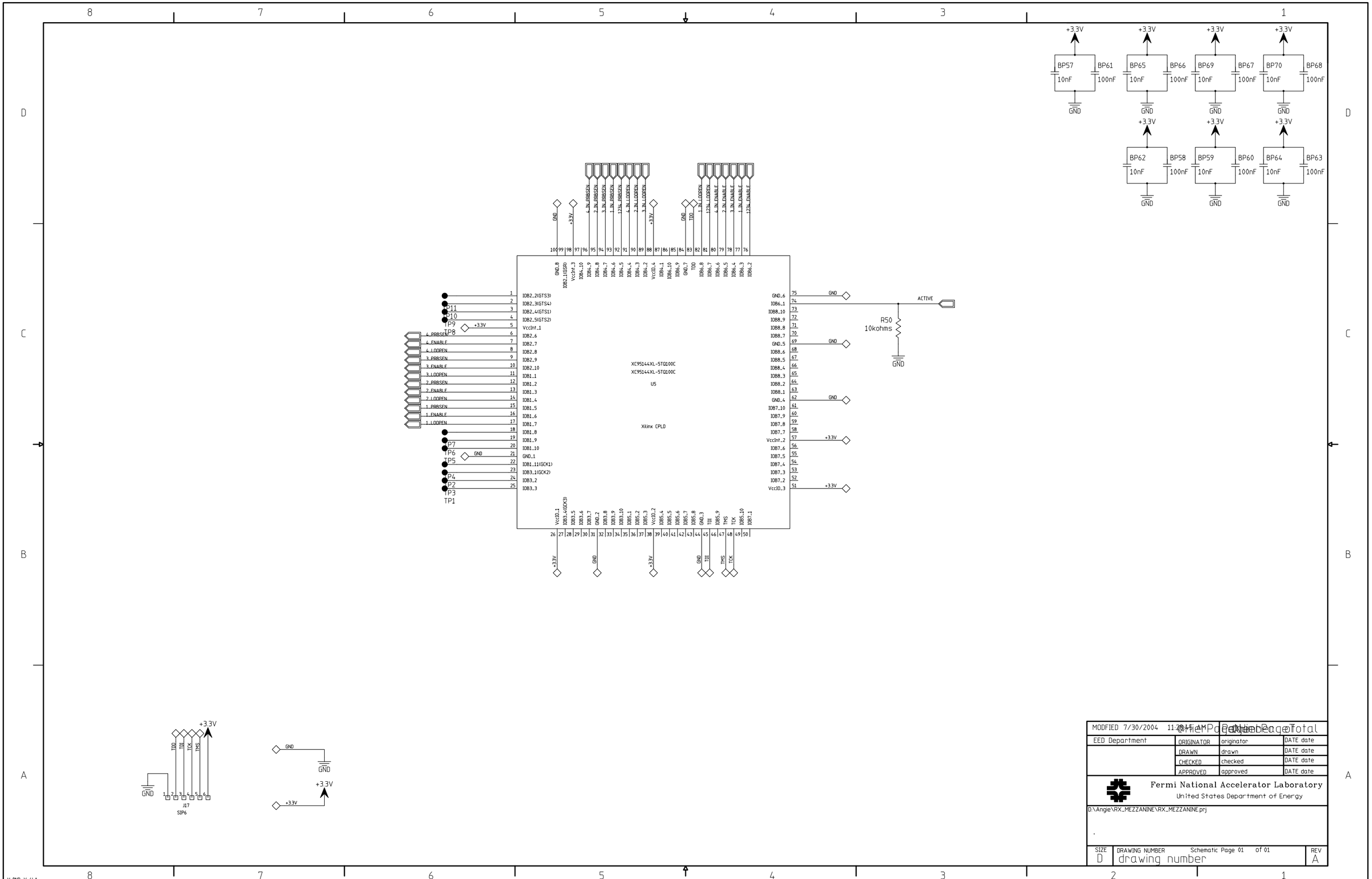

MODFIED 7/30/2004 11:28:15 AM

EED Department	ORIGINATOR	originator	DATE date
	DRAWN	drawn	DATE date
	CHECKED	checked	DATE date
	APPROVED	approved	DATE date

Fermi National Accelerator Laboratory
United States Department of Energy

D:\Angie\RX_MEZZANINE\RX_MEZZANINE.prj

SIZE	DRAWING NUMBER	Schematic Page 01 of 01	REV
D	drawing number		A

H=8ND; V=4LA

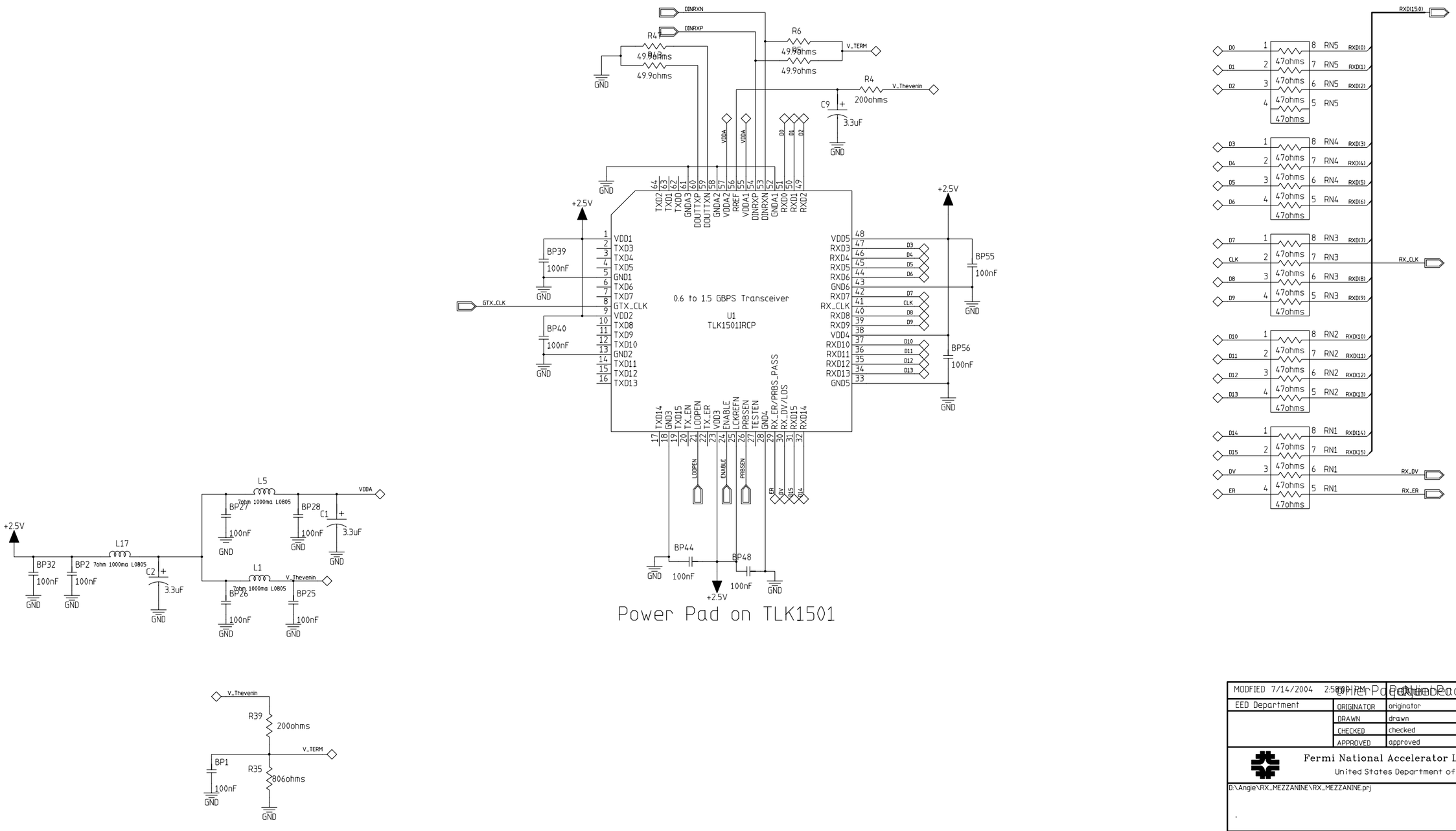

MODFIED 7/14/2004 2:50:00 PM	Chief Page Number 2	Total	
EED Department	ORIGINATOR	originator	DATE date
	DRAWN	drawn	DATE date
	CHECKED	checked	DATE date
	APPROVED	approved	DATE date

Fermi National Accelerator Laboratory
United States Department of Energy

D:\Angie\RX_MEZZANINE\RX_MEZZANINE.prj

SIZE	DRAWING NUMBER	Schematic Page 01 of 01	REV
D	drawing number		A

H=8ND; V=4LA

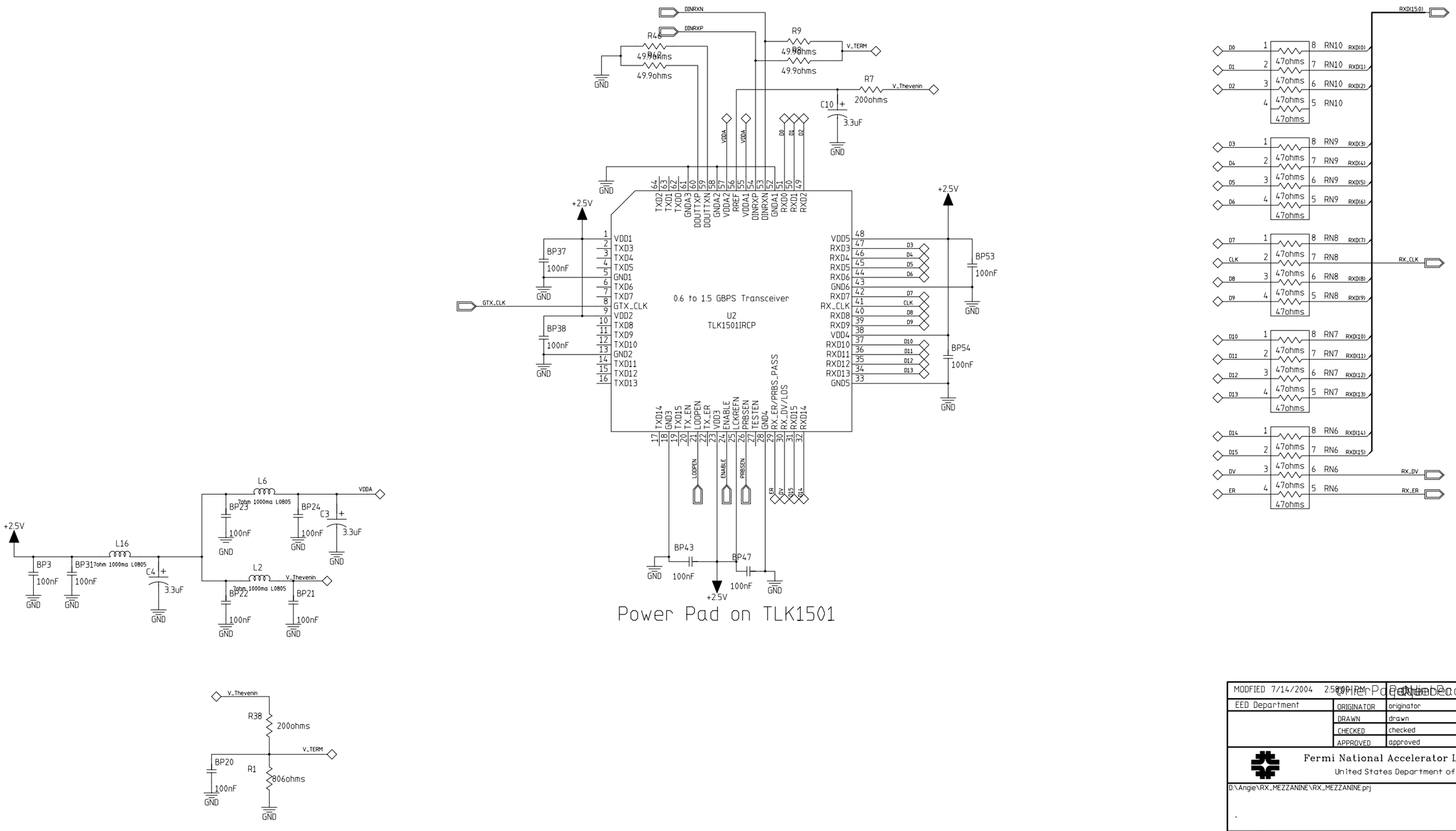

MODFIED 7/14/2004 2:50:00 PM		Page 1 of 1	
EED Department	ORIGINATOR	originator	DATE date
	DRAWN	drawn	DATE date
	CHECKED	checked	DATE date
	APPROVED	approved	DATE date

Fermi National Accelerator Laboratory
United States Department of Energy

D:\Angie\RX_MEZZANINE\RX_MEZZANINE.prj

SIZE	DRAWING NUMBER	REV
D	drawing number	A

Schematic Page 01 of 01

H=8ND; V=4LA

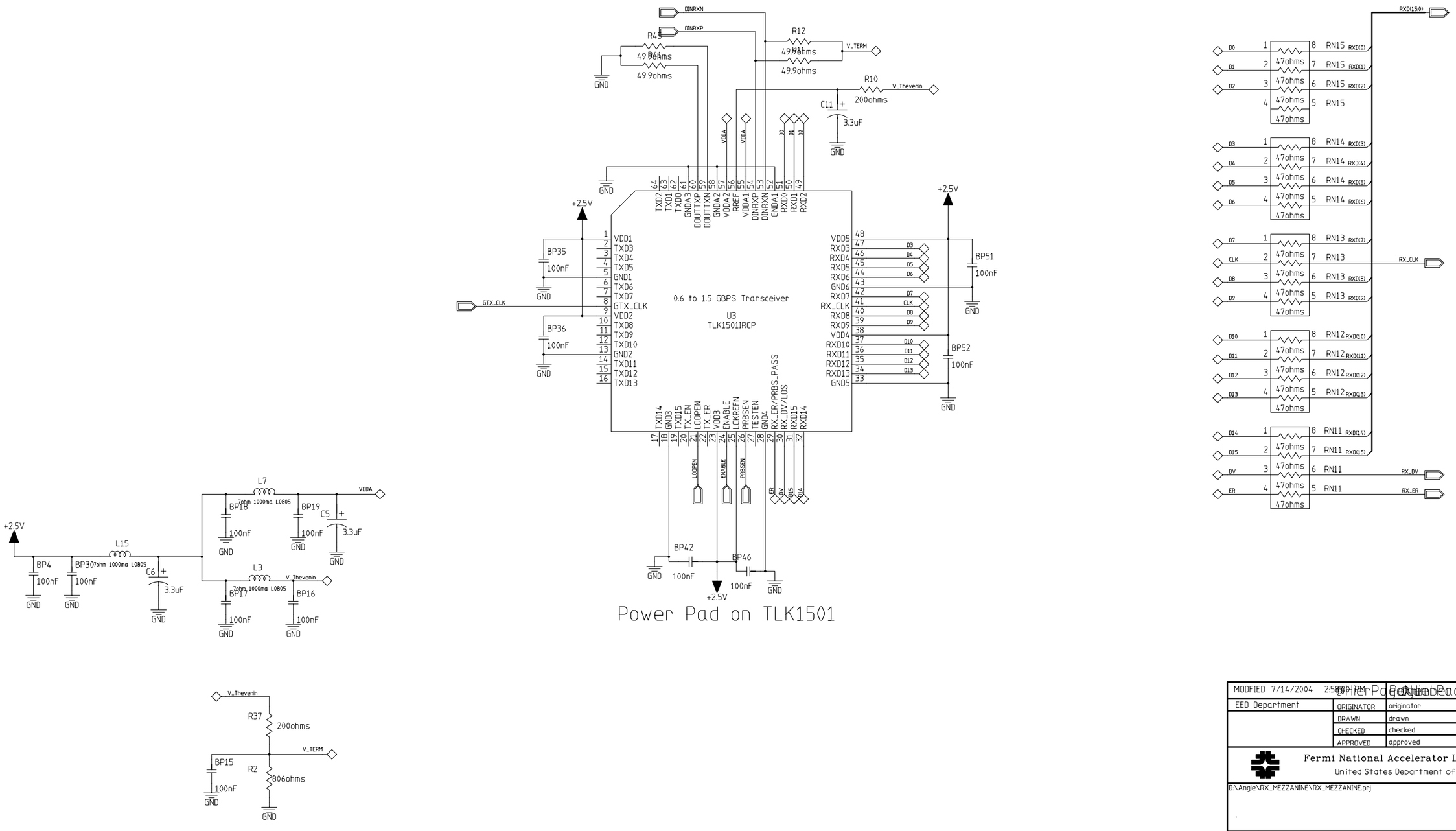

MODFIED 7/14/2004 2:50:00 PM	Chief Page Number 2	Page Total	
EED Department	ORIGINATOR	originator	DATE date
	DRAWN	drawn	DATE date
	CHECKED	checked	DATE date
	APPROVED	approved	DATE date

Fermi National Accelerator Laboratory
United States Department of Energy

D:\Angie\RX_MEZZANINE\RX_MEZZANINE.prj

SIZE	DRAWING NUMBER	Schematic Page 01 of 01	REV
D	drawing number		A

H=8ND; V=4LA

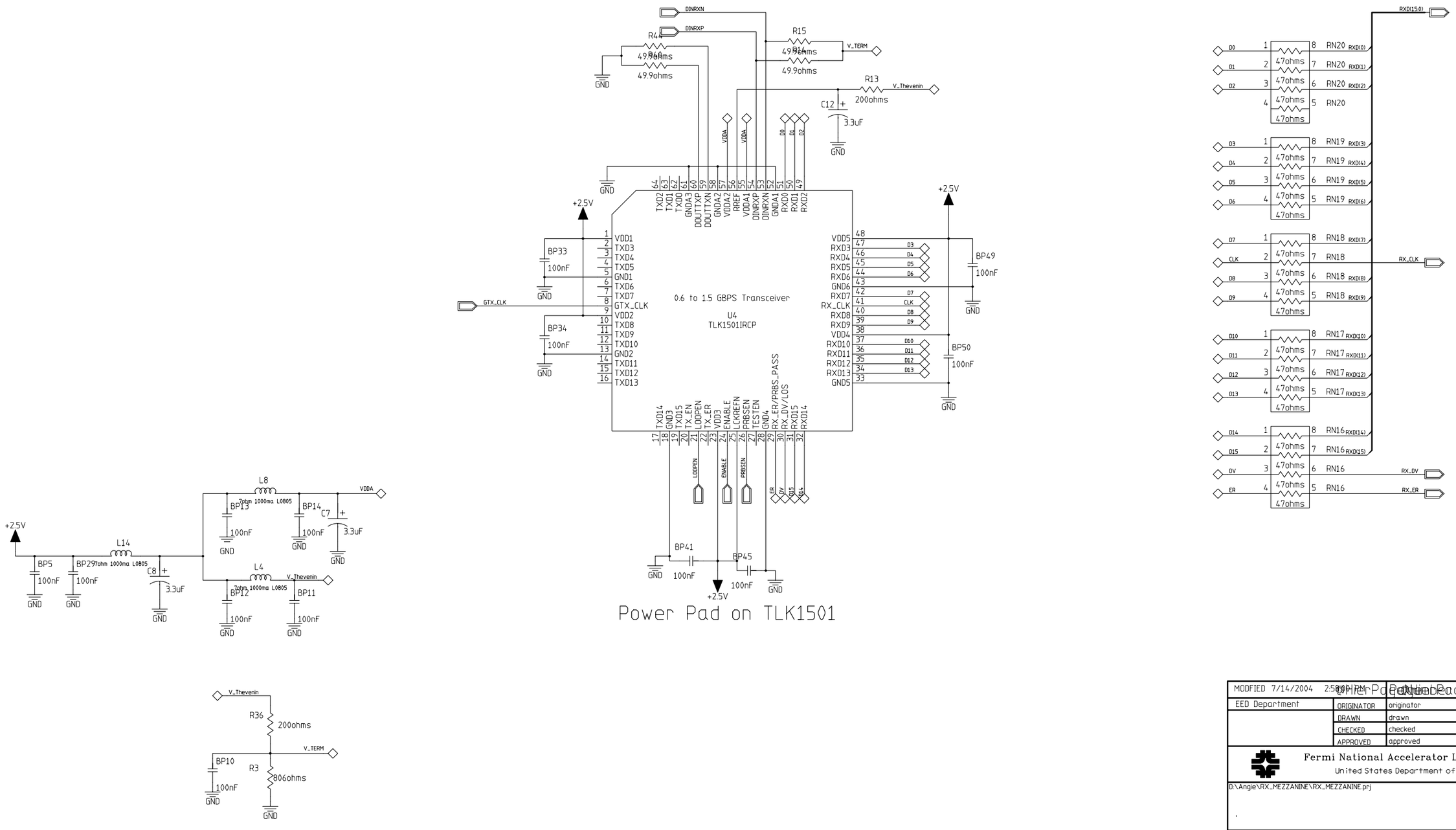

MODFIED 7/14/2004 2:50:00 PM		Page 1 of 1	
EED Department	ORIGINATOR	originator	DATE date
	DRAWN	drawn	DATE date
	CHECKED	checked	DATE date
	APPROVED	approved	DATE date

Fermi National Accelerator Laboratory
United States Department of Energy

D:\Angie\RX_MEZZANINE\RX_MEZZANINE.prj

SIZE	DRAWING NUMBER	REV
D	drawing number	A

Schematic Page 01 of 01

H=8ND; V=4LA