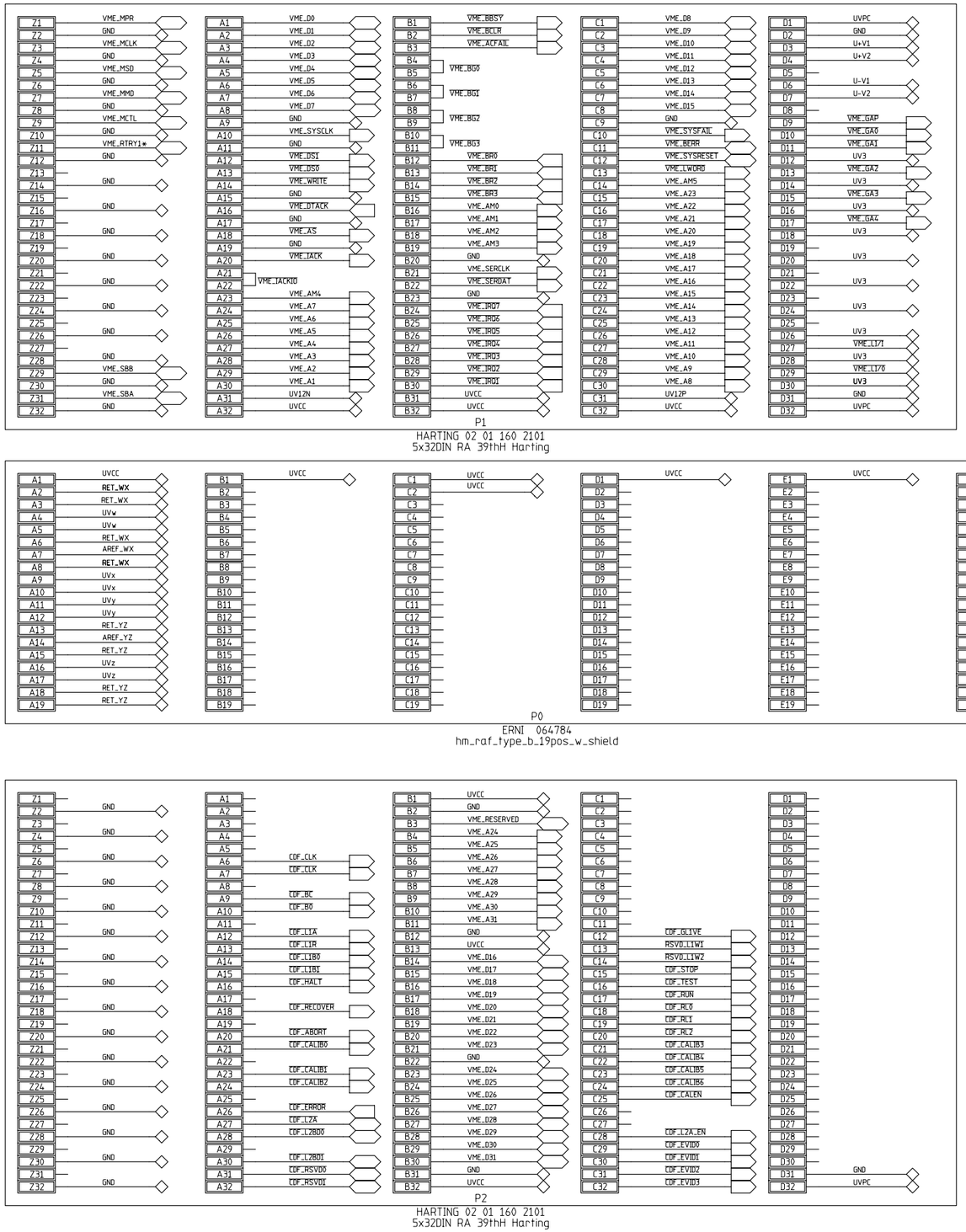

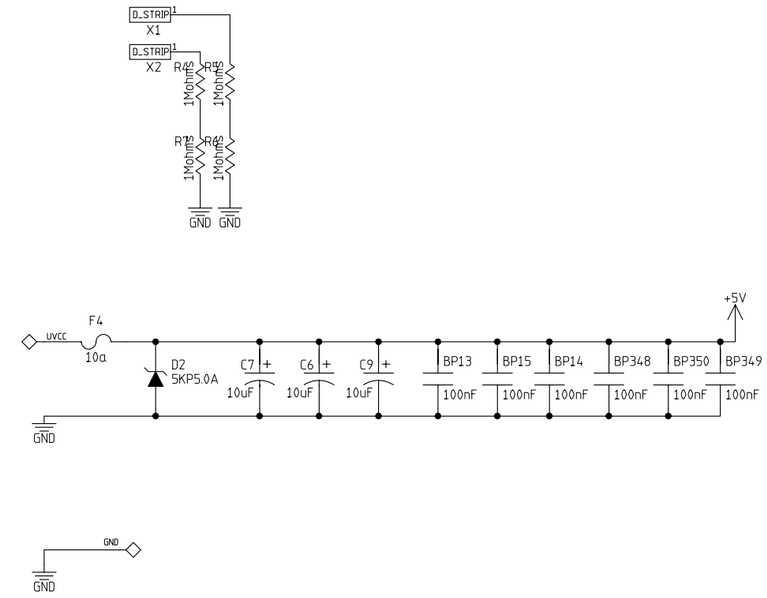

MODFIED 9/10/2004 10:48:54 AM			
EED Department	ORIGINATOR	originator	DATE date
	DRAWN	drawn	DATE date
	CHECKED	checked	DATE date
	APPROVED	approved	DATE date

Fermi National Accelerator Laboratory
United States Department of Energy

D:\XFT_FINDER\XFT_FINDER\XFT_FINDER.prj

VMEbus P1, P0, and P2 Connectors

SIZE	DRAWING NUMBER	REV
D	drawing number	A

Schematic Page 01 of 18

H=8ND; V=4LA

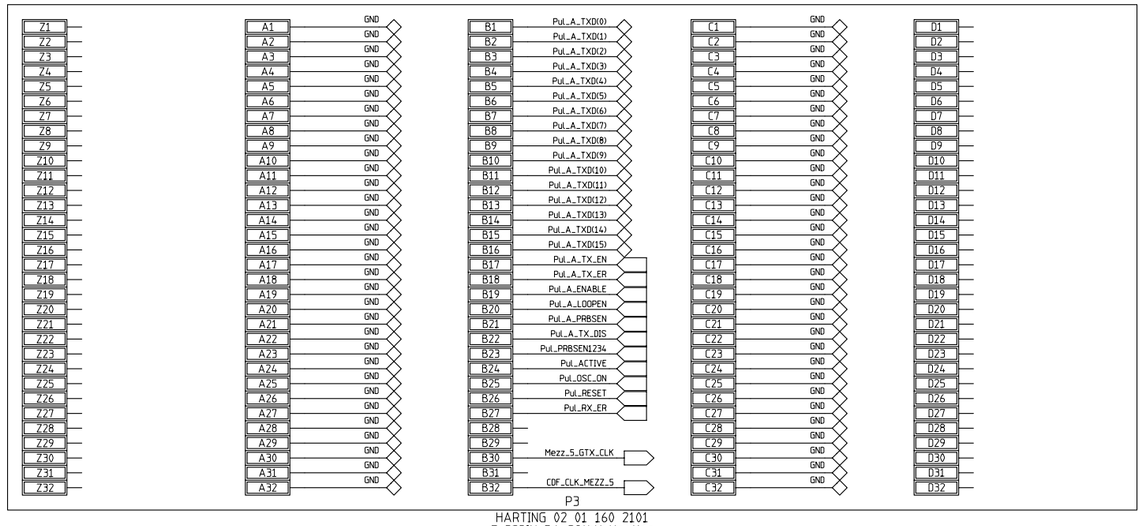

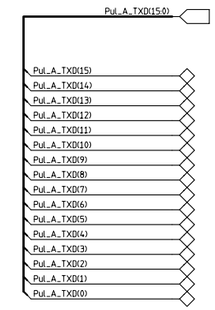

MODFIED 9/10/2004 10:48:54 AM	Page 2 of 18		
EED Department	ORIGINATOR	originator	DATE date
	DRAWN	drawn	DATE date
	CHECKED	checked	DATE date
	APPROVED	approved	DATE date

Fermi National Accelerator Laboratory
United States Department of Energy

D:\XFT_FINDER\XFT_FINDER\XFT_FINDER.prj

VMEbus P3 Connector

SIZE	DRAWING NUMBER	REV
D	drawing number	A

Schematic Page 02 of 18

H=8ND; V=4LA

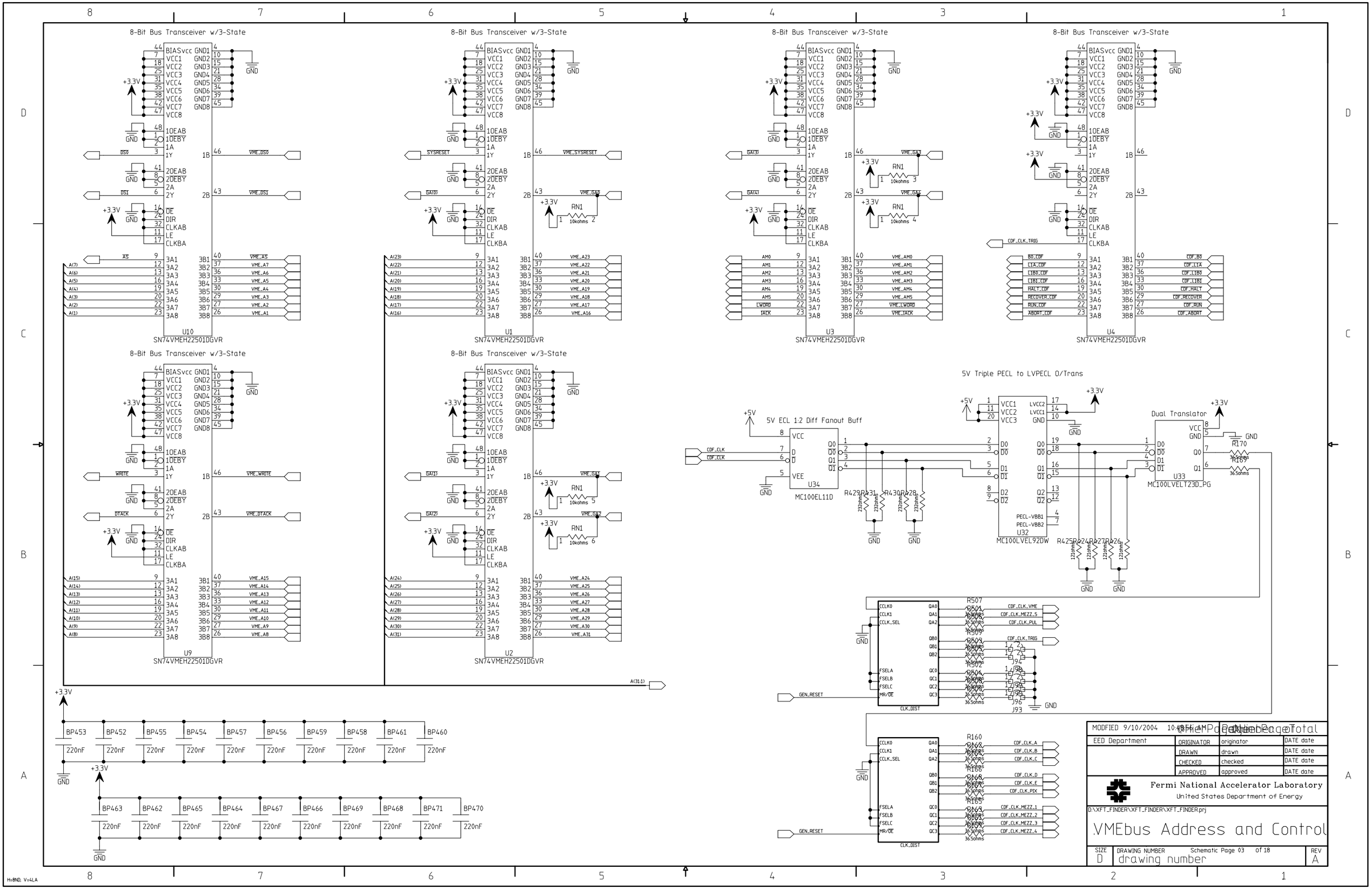
8-Bit Bus Transceiver w/3-State
U10
SN74VMEH22501DGVR
U1
SN74VMEH22501DGVR
U3
SN74VMEH22501DGVR
U4
SN74VMEH22501DGVR
U9
SN74VMEH22501DGVR
U2
SN74VMEH22501DGVR
5V Triple PECL to LVPECL O/Trans
5V ECL 1:2 Diff Fanout Buff
U34
MC100EL11D
U32
MC100LVEL92DW
Dual Translator
U33
MC100LVELT23D_PG
CLK_DIST
GEN_RESET
MODIFIED 9/10/2004
EED Department
ORIGINATOR
DRAWN
CHECKED
APPROVED
originator
drawn
checked
approved
DATE date
Fermi National Accelerator Laboratory
United States Department of Energy
D:\XFT_FINDER\XFT_FINDER\XFT_FINDER.prj
VMEbus Address and Control
SIZE
D
DRAWING NUMBER
drawing number
Schematic Page 03 of 18
REV
A
H=8ND; V=4LA

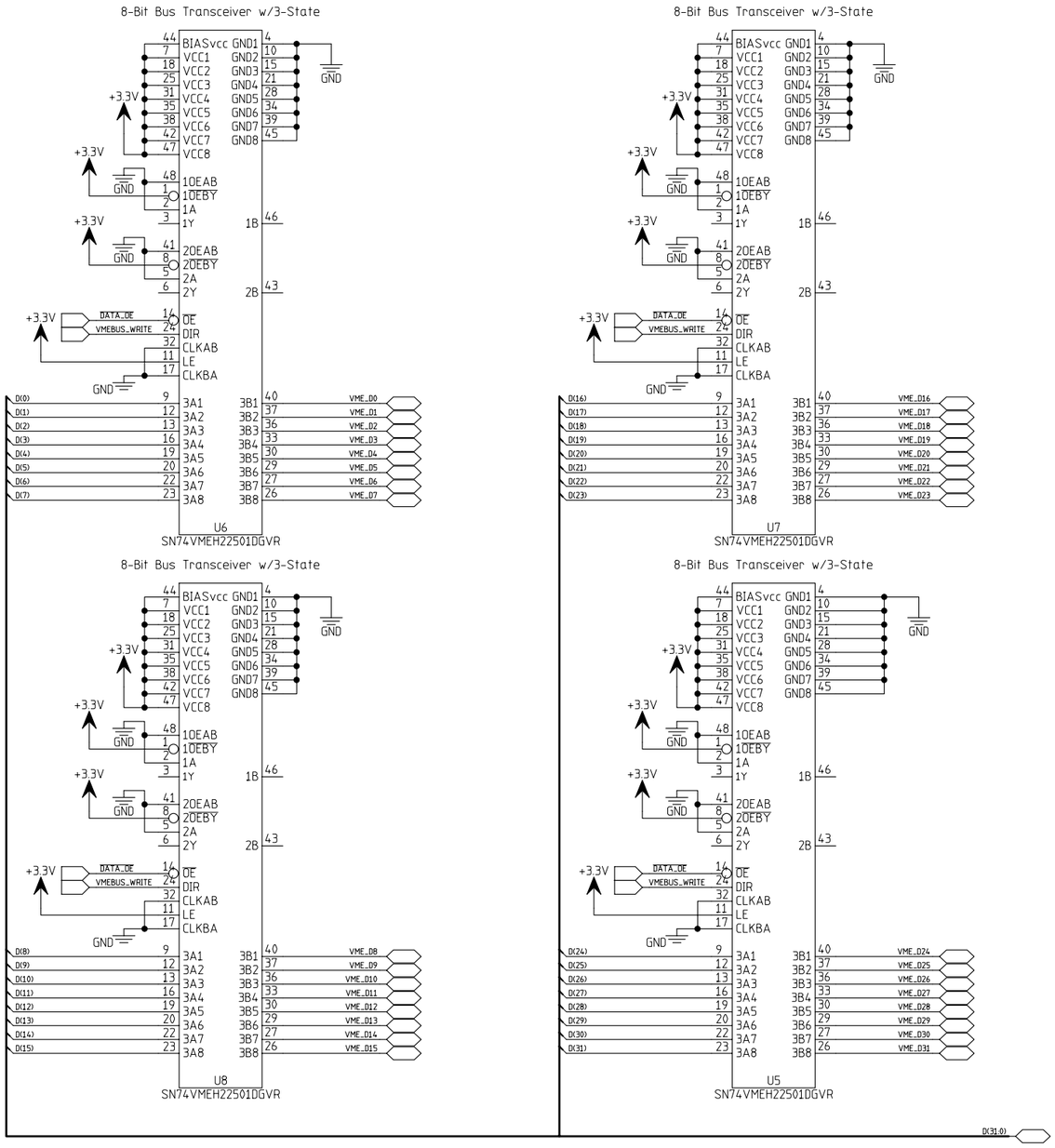

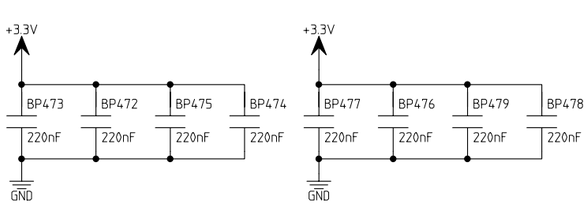

MODIFIED 9/10/2004 10:48:56 AM		PAGE 04	PAGE Total
EED Department	ORIGINATOR	originator	DATE date
	DRAWN	drawn	DATE date
	CHECKED	checked	DATE date
	APPROVED	approved	DATE date

Fermi National Accelerator Laboratory
United States Department of Energy

D:\XFT_FINDER\XFT_FINDER\XFT_FINDER.prj

VMEbus Data Buffers

SIZE	DRAWING NUMBER	REV
D	drawing number (Schematic Page 04 of 18)	A

H=8ND; V=4LA

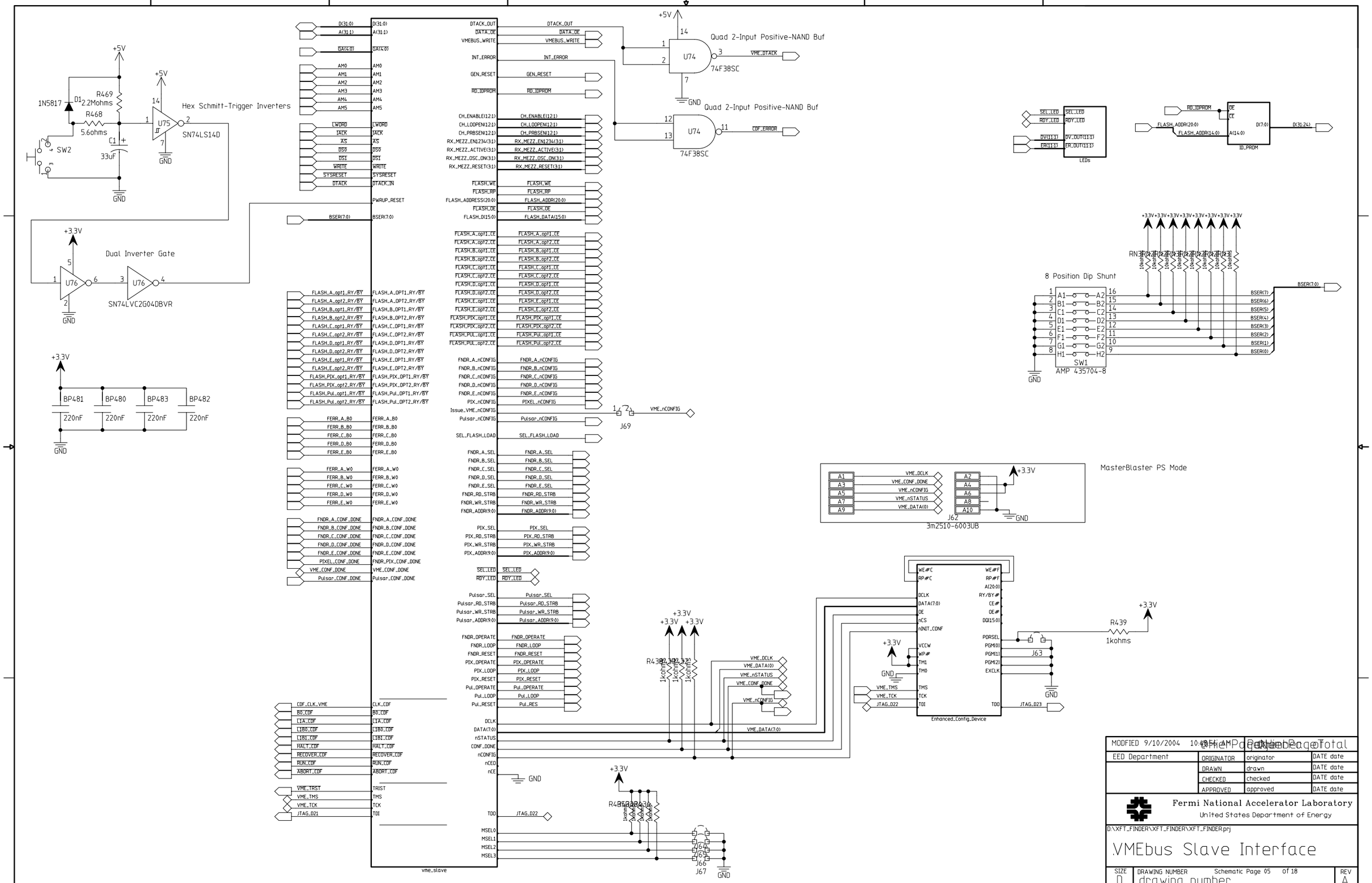
Hex Schmitt-Trigger Inverters
SN74LS14D
Dual Inverter Gate
SN74LVC2G04DBVR
Quad 2-Input Positive-NAND Buf
74F38SC
LEDs
ID_PROM
8 Position Dip Shunt
AMP 435704-8
MasterBlaster PS Mode
3m2510-6003UB
Enhanced_Config_Device
vme_slave
J69
J62
J63
J64
J65
J66
J67
Fermi National Accelerator Laboratory
United States Department of Energy
D:\XFT_FINDER\XFT_FINDER\XFT_FINDER.prj
VMEbus Slave Interface
drawing number
Schematic Page 05 of 18

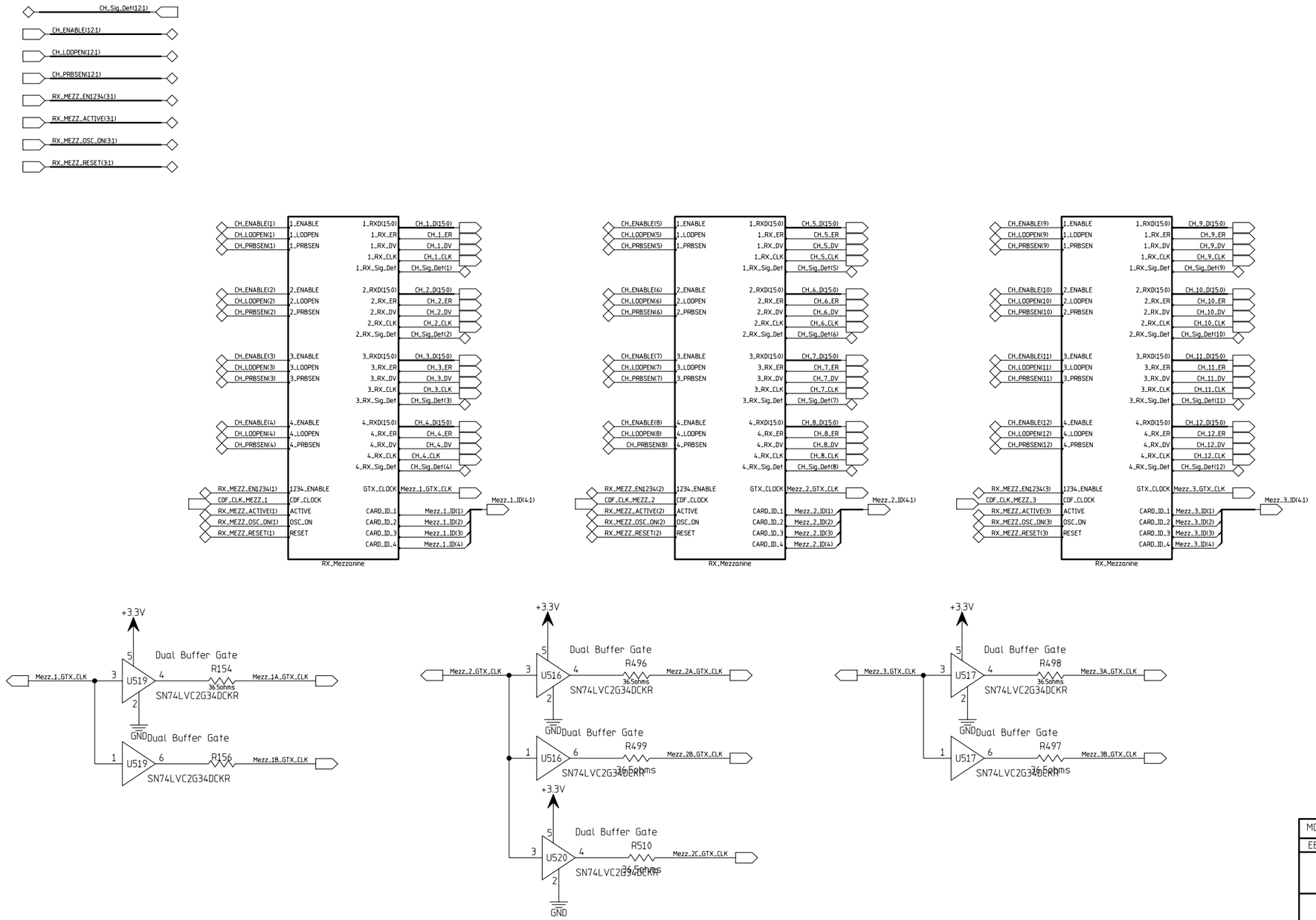

MODFIED 9/10/2004 10:50:35 AM	Drawing Number		
EED Department	ORIGINATOR	originator	DATE date
	DRAWN	drawn	DATE date
	CHECKED	checked	DATE date
	APPROVED	approved	DATE date

Fermi National Accelerator Laboratory
United States Department of Energy

D:\XFT_FINDER\XFT_FINDER\XFT_FINDER.prj

Optical Data Fibers Receiver Mezzanines

SIZE	DRAWING NUMBER	REV
D	drawing number	A

Schematic Page 06 of 18

H=8ND; V=4LA

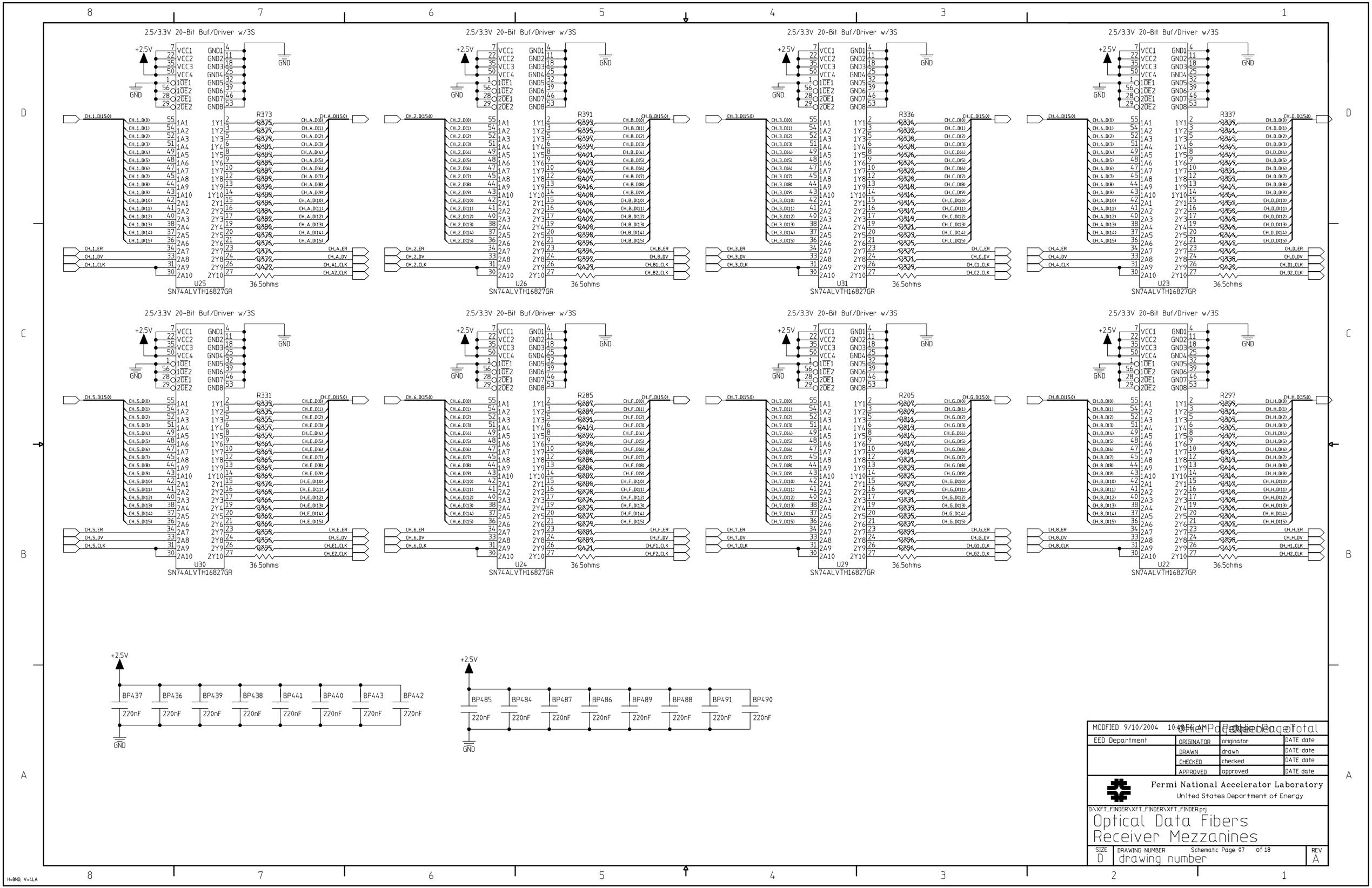
2.5/3.3V 20-Bit Buf/Driver w/3S
U25
SN74ALVTH16827GR
R373
36.5ohms
U26
SN74ALVTH16827GR
R391
36.5ohms
U31
SN74ALVTH16827GR
R336
36.5ohms
U23
SN74ALVTH16827GR
R337
36.5ohms
U30
SN74ALVTH16827GR
R331
36.5ohms
U24
SN74ALVTH16827GR
R285
36.5ohms
U29
SN74ALVTH16827GR
R205
36.5ohms
U22
SN74ALVTH16827GR
R297
36.5ohms
+2.5V
GND
BP437
BP436
BP439
BP438
BP441
BP440
BP443
BP442
220nF
BP485
BP484
BP487
BP486
BP489
BP488
BP491
BP490
MODFIED 9/10/2004 10:48:56 AM
EED Department
ORIGINATOR
DRAWN
CHECKED
APPROVED
originator
drawn
checked
approved
DATE date
Fermi National Accelerator Laboratory
United States Department of Energy
D:\XFT_FINDER\XFT_FINDER\XFT_FINDER.prj
Optical Data Fibers
Receiver Mezzanines
SIZE
D
DRAWING NUMBER
drawing number
Schematic Page 07 of 18
REV
A
H=8ND; V=4LA

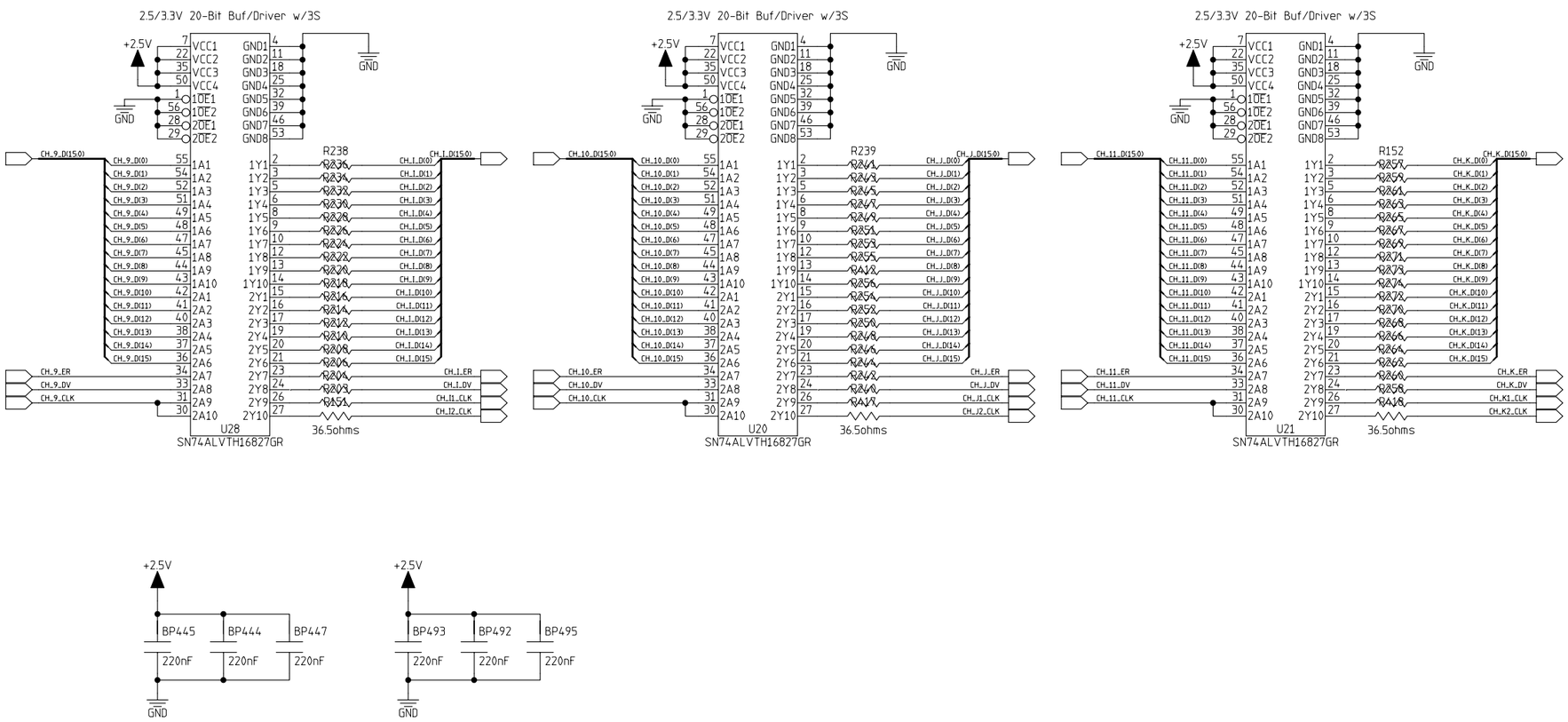

MODIFIED 9/10/2004 10:48:54 AM	Chief Page Number 2	Page Total	
EED Department	ORIGINATOR	originator	DATE date
	DRAWN	drawn	DATE date
	CHECKED	checked	DATE date
	APPROVED	approved	DATE date

Fermi National Accelerator Laboratory
United States Department of Energy

D:\XFT_FINDER\XFT_FINDER\XFT_FINDER.prj

Optical Data Fibers Receiver Mezzanines

SIZE	DRAWING NUMBER	REV
D	drawing number	A

Schematic Page 08 of 18

H=8ND; V=4LA

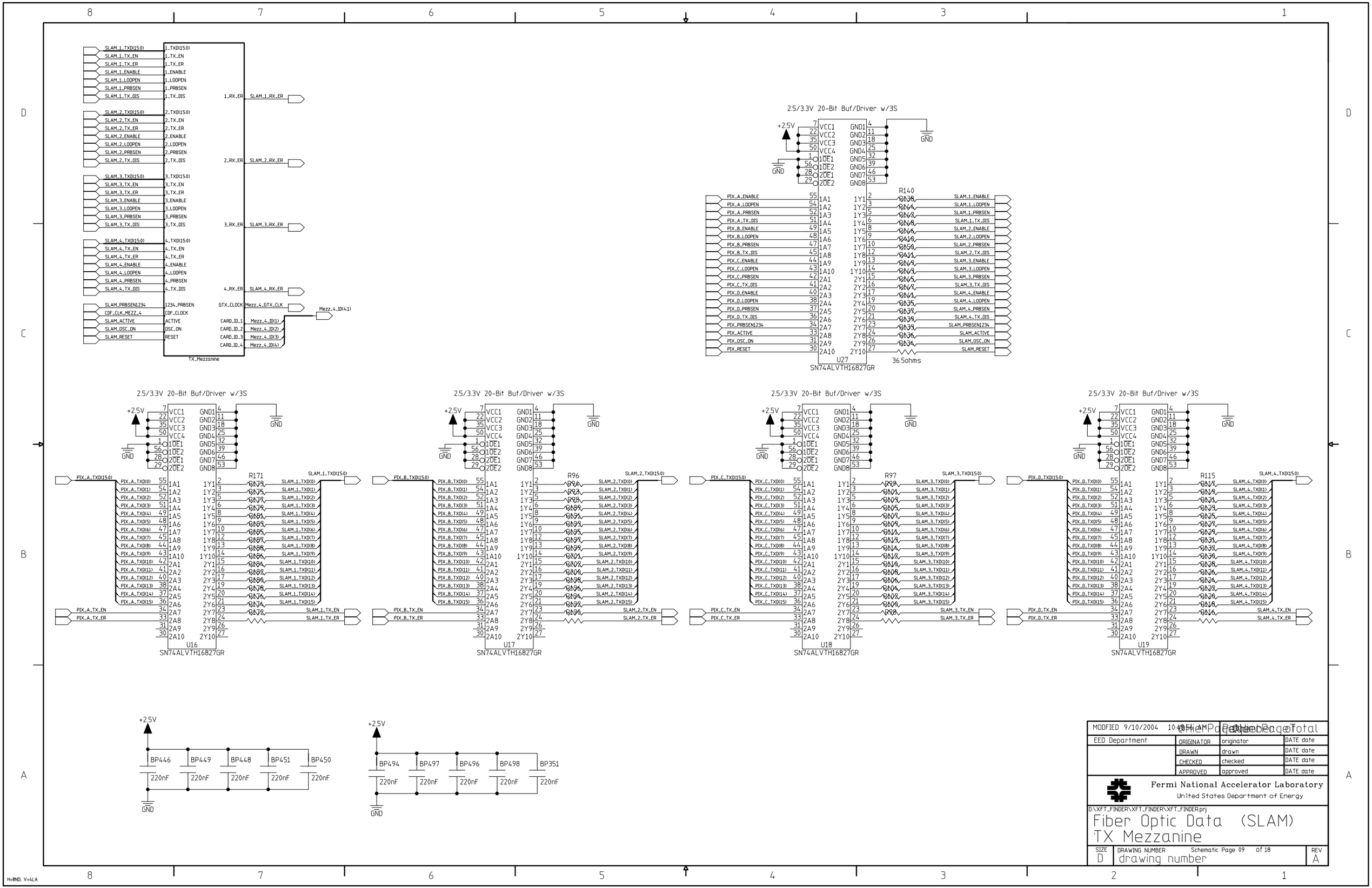

TX_Mezzanine
2.5/3.3V 20-Bit Buf/Driver w/3S
U27
SN74ALVTH16827GR
R140
36.5ohms
U16
SN74ALVTH16827GR
R171
U17
SN74ALVTH16827GR
R96
U18
SN74ALVTH16827GR
R97
U19
SN74ALVTH16827GR
R115
BP446
BP449
BP448
BP451
BP450
BP494
BP497
BP496
BP498
BP351
220nF
+2.5V
GND
MODFIED 9/10/2004
EED Department
ORIGINATOR
DRAWN
CHECKED
APPROVED
originator
drawn
checked
approved
DATE date
Fermi National Accelerator Laboratory
United States Department of Energy
D:\XFT_FINDER\XFT_FINDER\XFT_FINDER.prj
Fiber Optic Data (SLAM)
TX Mezzanine
SIZE
D
DRAWING NUMBER
drawing number
Schematic Page 09 of 18
REV
A
H=8ND; V=4LA

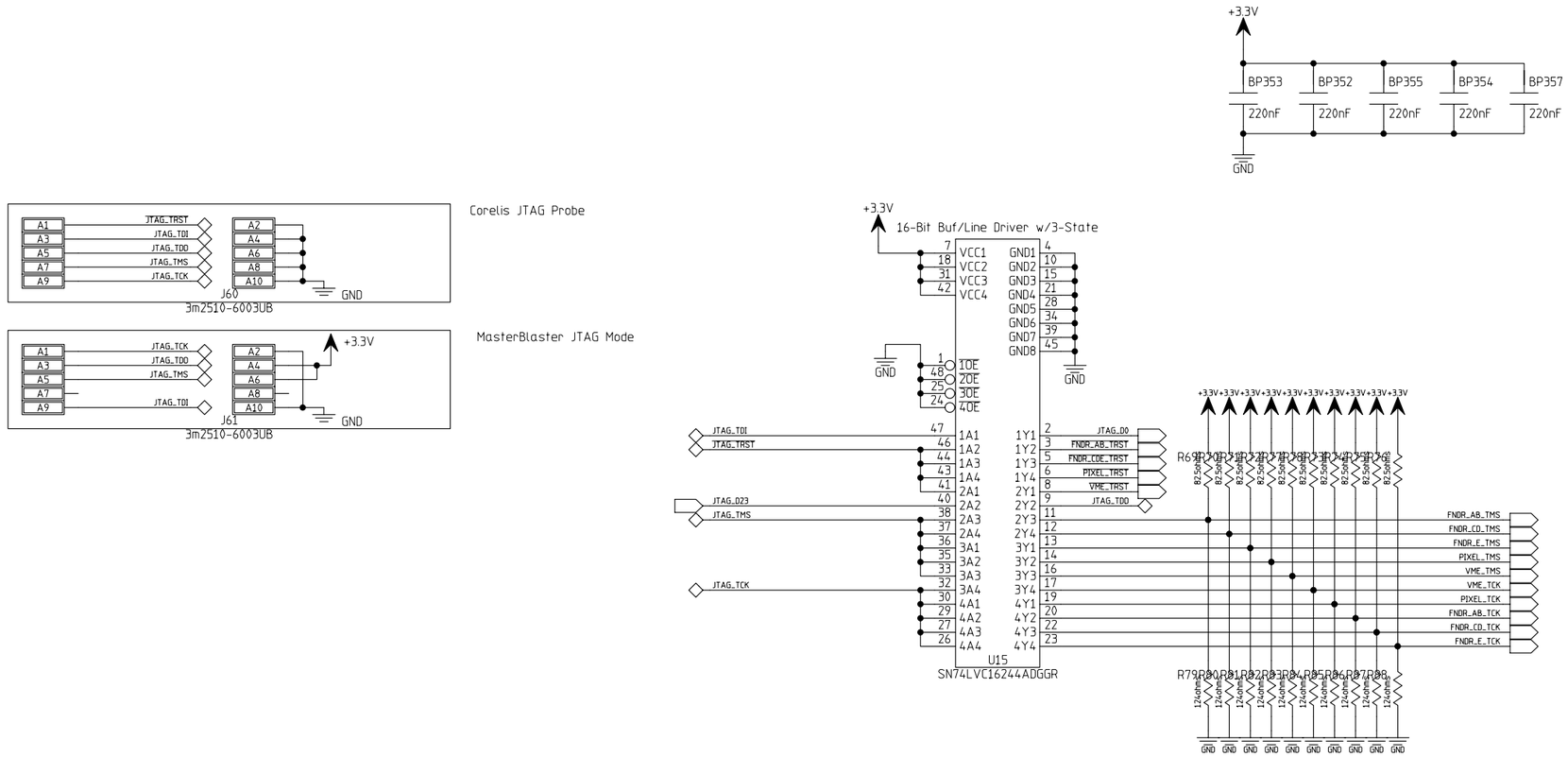

MODFIED 9/10/2004 10:48:54 AM	Page 10 of 18		
EED Department	ORIGINATOR	originator	DATE date
	DRAWN	drawn	DATE date
	CHECKED	checked	DATE date
	APPROVED	approved	DATE date

Fermi National Accelerator Laboratory
United States Department of Energy

D:\XFT_FINDER\XFT_FINDER\XFT_FINDER.prj

SIZE	DRAWING NUMBER	REV
D	drawing number	A

Schematic Page 10 of 18

H=8ND; V=4LA

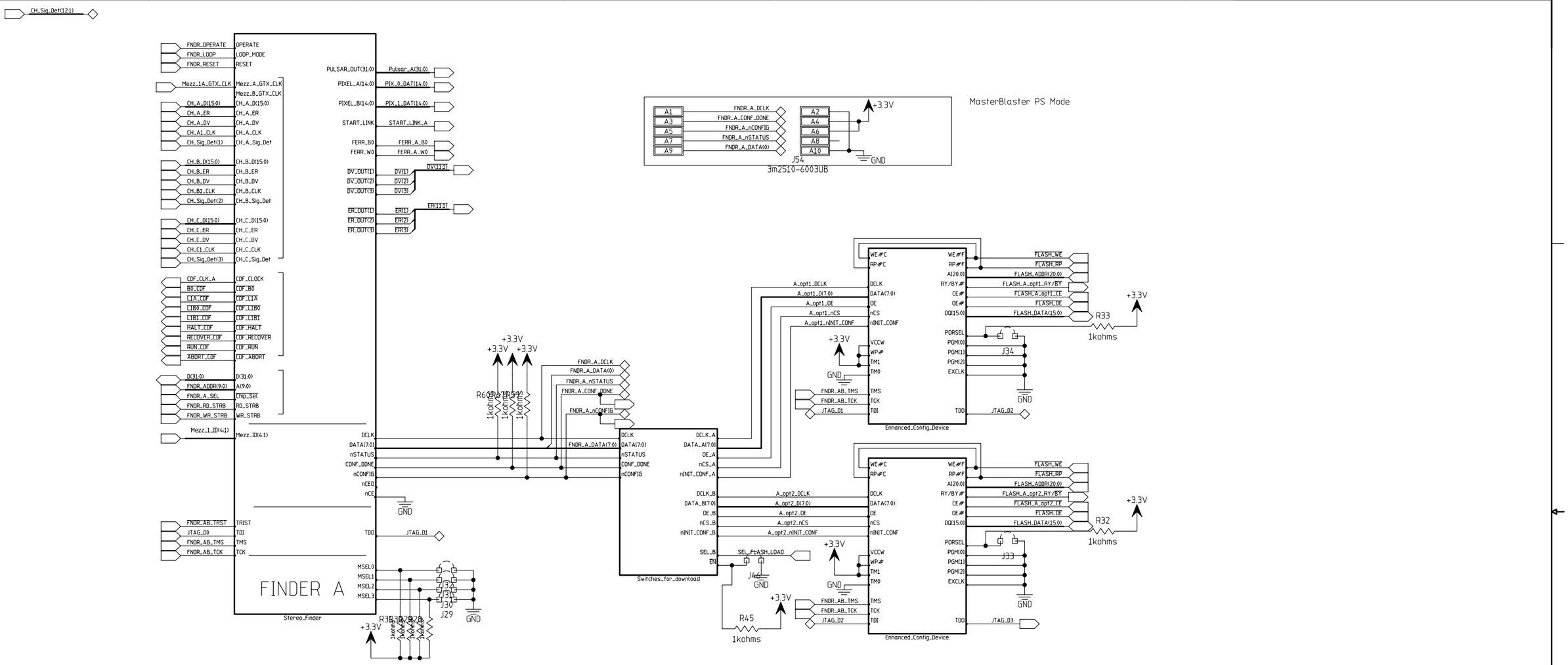

MODFIED 9/10/2004 10:48:54 AM			
EED Department	ORIGINATOR	originator	DATE date
	DRAWN	drawn	DATE date
	CHECKED	checked	DATE date
	APPROVED	approved	DATE date

Fermi National Accelerator Laboratory
United States Department of Energy

D:\XFT_FINDER\XFT_FINDER\XFT_FINDER.prj

SIZE	DRAWING NUMBER	REV
D	drawing number	A

Schematic Page 11 of 18

H=8ND; V=4LA

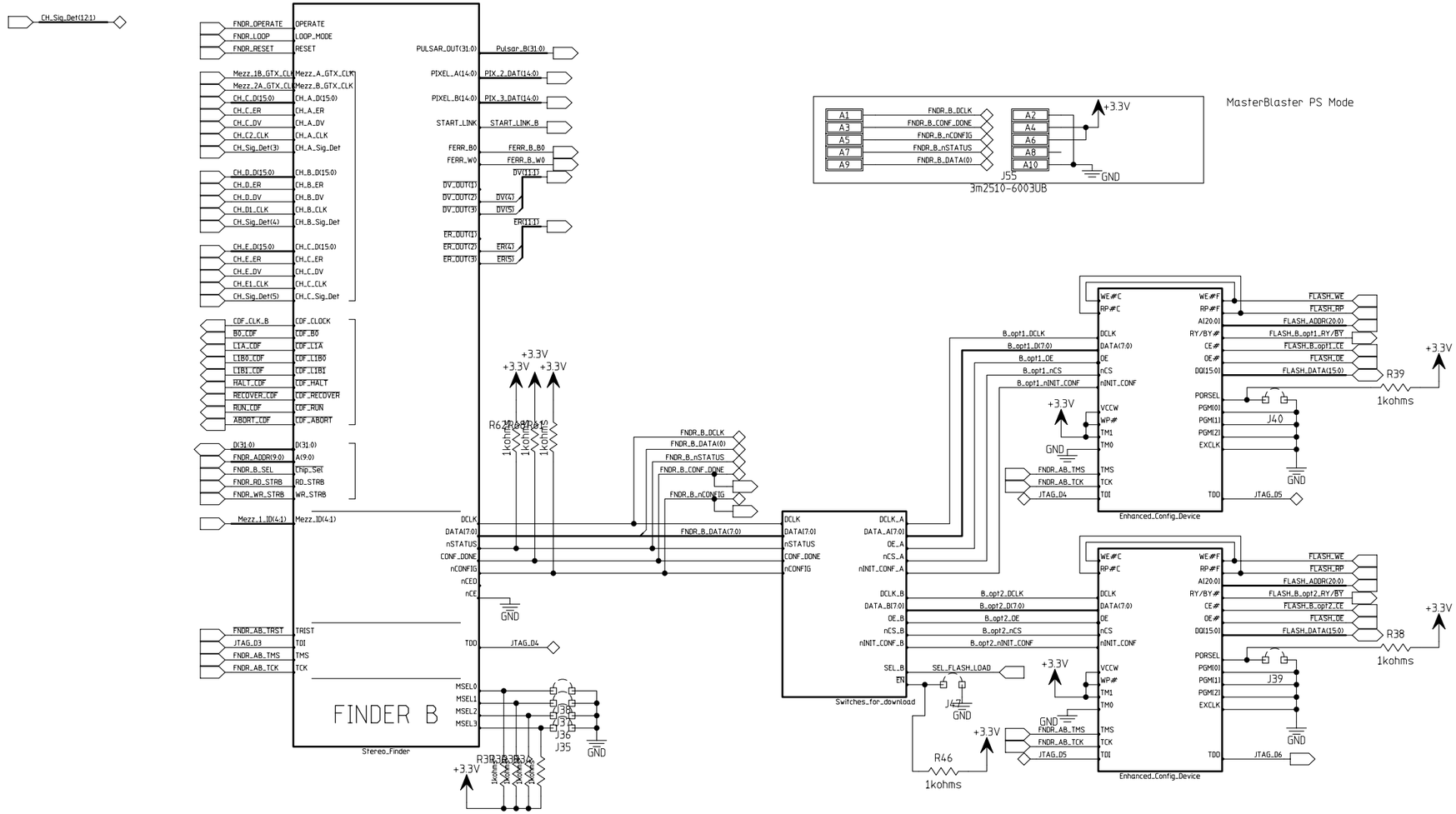

MODIFIED 9/10/2004 10:48:56 AM	Page 12 of 18		
EED Department	ORIGINATOR	originator	DATE date
	DRAWN	drawn	DATE date
	CHECKED	checked	DATE date
	APPROVED	approved	DATE date

Fermi National Accelerator Laboratory
United States Department of Energy

D:\XFT_FINDER\XFT_FINDER\XFT_FINDER.prj

SIZE	DRAWING NUMBER	Schematic Page 12 of 18	REV
D	drawing number		A

H=8ND; V=4LA

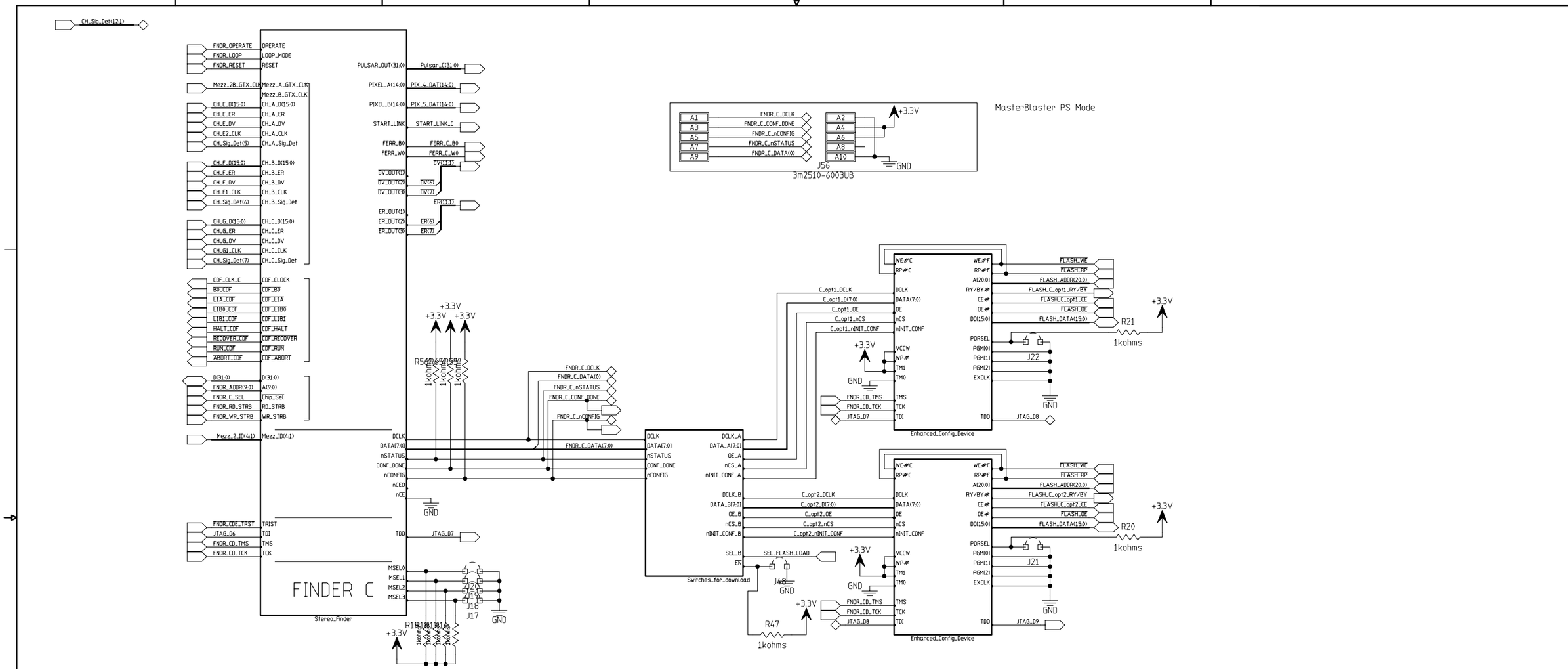

MODIFIED 9/10/2004 10:48:56 AM	Page Number 2		Total
EED Department	ORIGINATOR	originator	DATE date
	DRAWN	drawn	DATE date
	CHECKED	checked	DATE date
	APPROVED	approved	DATE date

Fermi National Accelerator Laboratory
United States Department of Energy

D:\XFT_FINDER\XFT_FINDER\XFT_FINDER.prj

SIZE	DRAWING NUMBER	Schematic Page 13 of 18	REV
D	drawing number		A

H=8ND; V=4LA

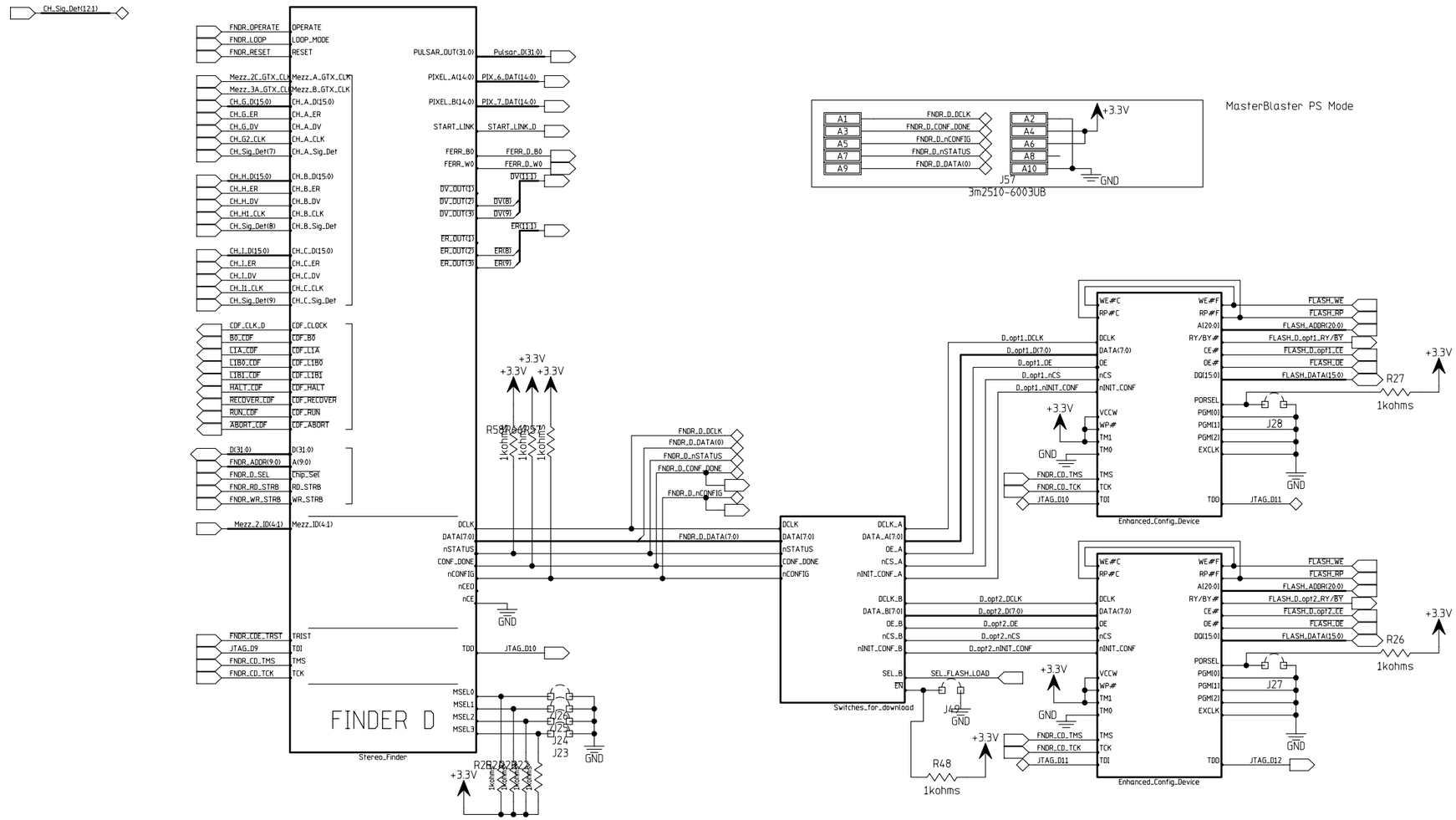

MODIFIED 9/10/2004 10:48:54 AM	Page 14 of 18		
EED Department	ORIGINATOR	originator	DATE date
	DRAWN	drawn	DATE date
	CHECKED	checked	DATE date
	APPROVED	approved	DATE date

Fermi National Accelerator Laboratory
United States Department of Energy

D:\XFT_FINDER\XFT_FINDER\XFT_FINDER.prj

SIZE	DRAWING NUMBER	Schematic Page 14 of 18	REV
D	drawing number		A

H=8ND; V=4LA

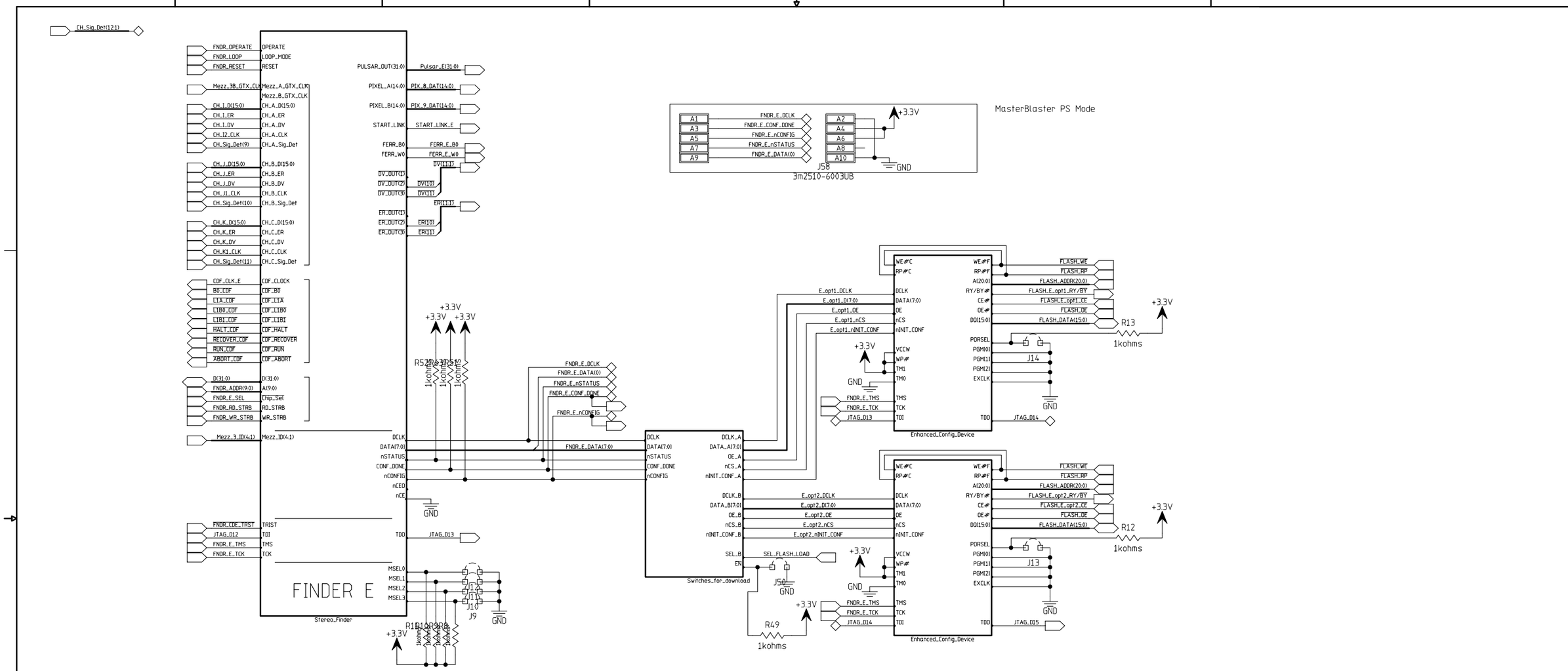

MODIFIED 9/10/2004 10:48:56 AM	Page 1 of 2		
EED Department	ORIGINATOR	originator	DATE date
	DRAWN	drawn	DATE date
	CHECKED	checked	DATE date
	APPROVED	approved	DATE date

Fermi National Accelerator Laboratory
United States Department of Energy

D:\XFT_FINDER\XFT_FINDER\XFT_FINDER.prj

SIZE	DRAWING NUMBER	Schematic Page 15 of 18	REV
D	drawing number		A

H=8ND; V=4LA

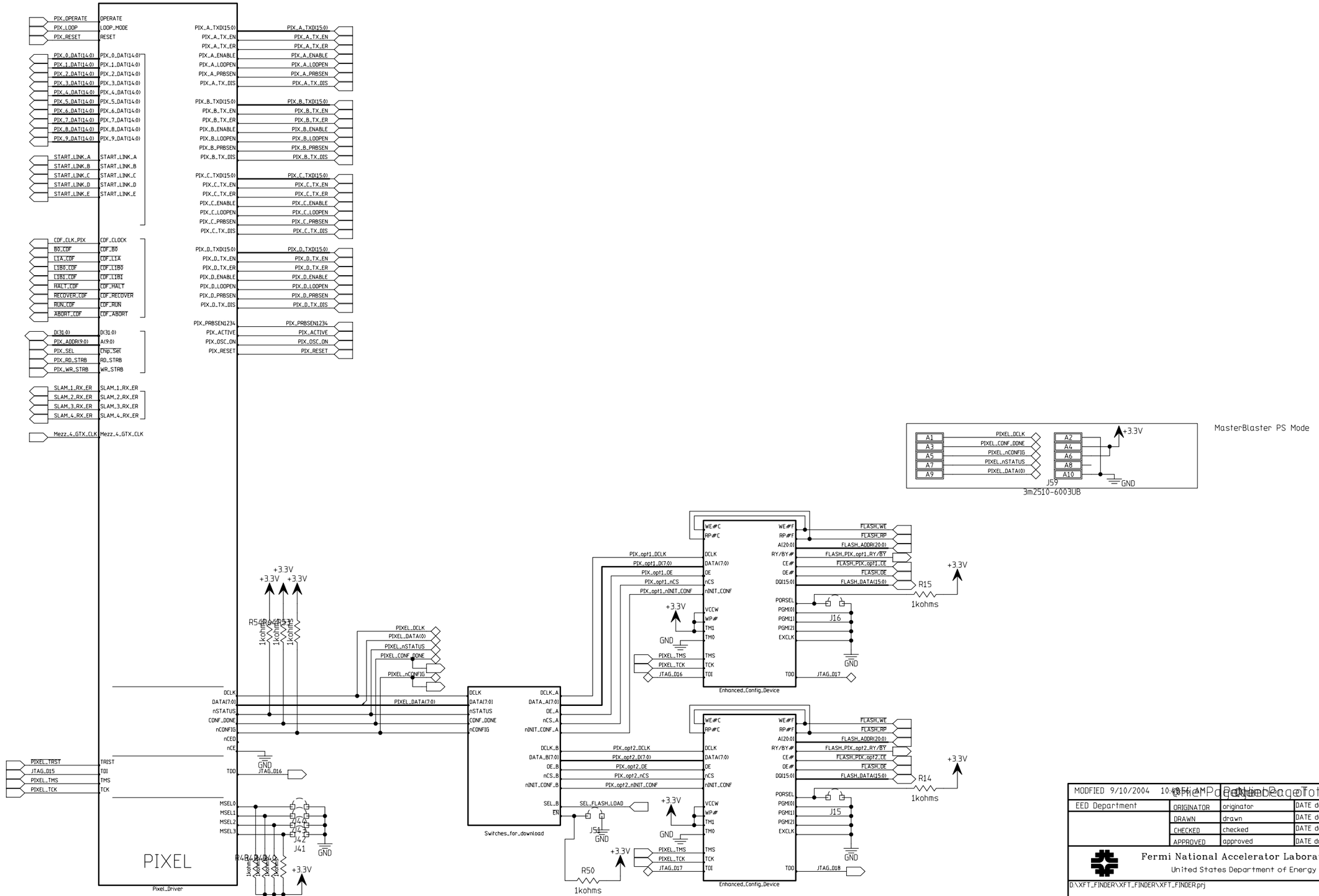

MODFIED 9/10/2004 10:48:54 AM	Page 1 of 1		
EED Department	ORIGINATOR	originator	DATE date
	DRAWN	drawn	DATE date
	CHECKED	checked	DATE date
	APPROVED	approved	DATE date

Fermi National Accelerator Laboratory
United States Department of Energy

D:\XFT_FINDER\XFT_FINDER\XFT_FINDER.prj

SIZE	DRAWING NUMBER	REV
D	drawing number Schematic Page 16 of 18	A

H=8ND; V=4LA

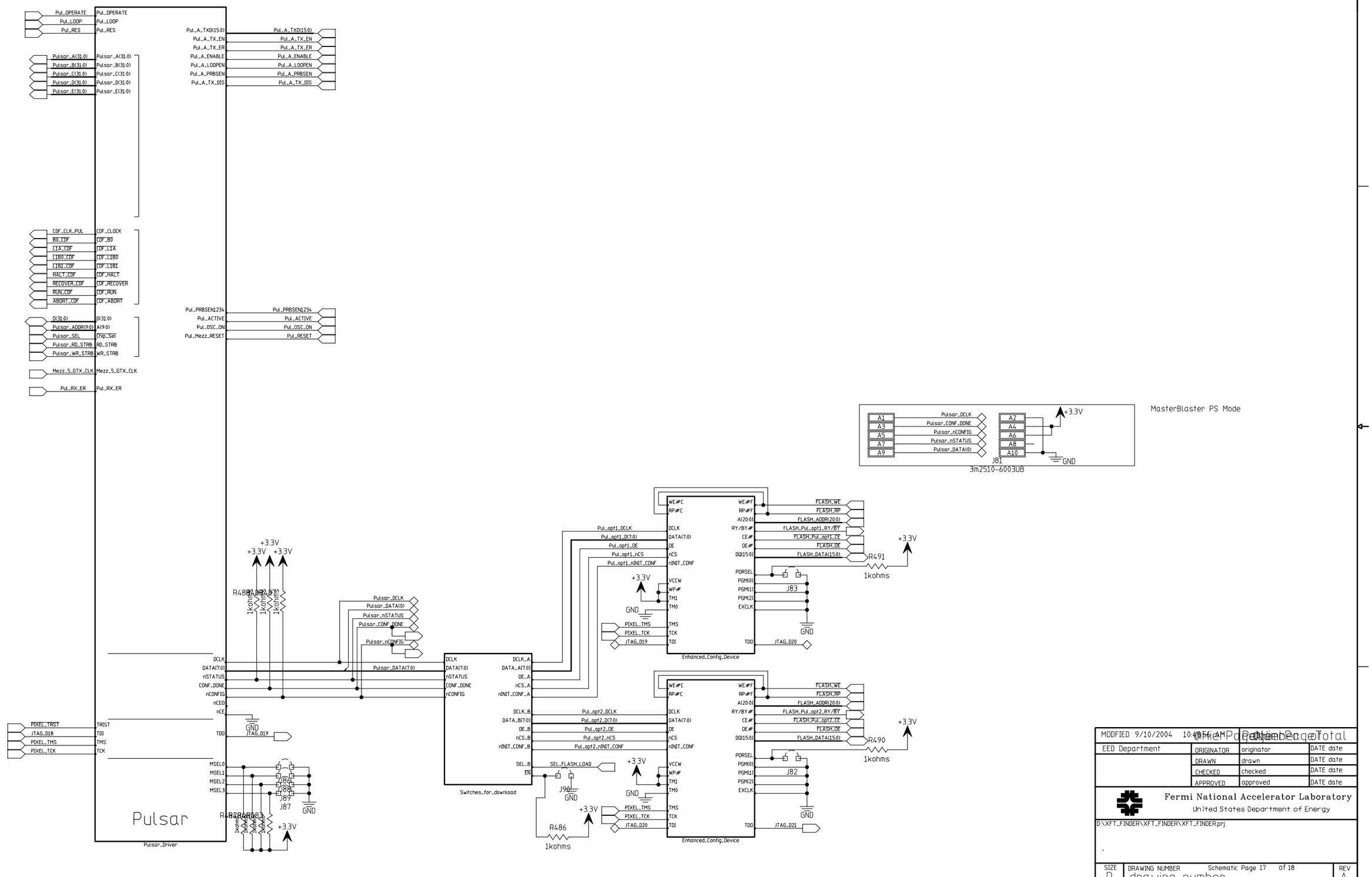
Pul_OPERATE
Pul_LOOP
Pul_RES
Pulsar_A(31:0)
Pulsar_B(31:0)
Pulsar_C(31:0)
Pulsar_D(31:0)
Pulsar_E(31:0)
CDF_CLK_PUL
B0_CDF
L1A_CDF
L1B0_CDF
L1B1_CDF
HALT_CDF
RECOVER_CDF
RUN_CDF
ABORT_CDF
D(31:0)
Pulsar_ADDR(9:0)
Pulsar_SEL
Pulsar_RD_STRB
Pulsar_WR_STRB
Mezz_5_GTX_CLK
Pul_RX_ER
Pul_A_TXD(15:0)
Pul_A_TX_EN
Pul_A_TX_ER
Pul_A_ENABLE
Pul_A_LOOPEN
Pul_A_PRBSEN
Pul_A_TX_DIS
Pul_PRBSEN1234
Pul_ACTIVE
Pul_OSC_ON
Pul_Mezz_RESET
Pulsar
Pulsar_Driver
PIXEL_TRST
JTAG_D18
PIXEL_TMS
PIXEL_TCK
MSEL0
MSEL1
MSEL2
MSEL3
+3.3V
GND
J86
J88
J89
J87
Pulsar_DCLK
Pulsar_DATA(0)
Pulsar_nSTATUS
Pulsar_CONF_DONE
Pulsar_nCONFIG
Pulsar_DATA(7:0)
DCLK
DATA(7:0)
nSTATUS
CONF_DONE
nCONFIG
nCED
nCE
TRIST
TDI
TMS
TCK
TDO
JTAG_D19
Switches_for_download
DCLK_A
DATA_A(7:0)
OE_A
nCS_A
nINIT_CONF_A
DCLK_B
DATA_B(7:0)
OE_B
nCS_B
nINIT_CONF_B
SEL_B
EN
SEL_FLASH_LOAD
J90
R486
1kohms
Pul_opt1_DCLK
Pul_opt1_D(7:0)
Pul_opt1_OE
Pul_opt1_nCS
Pul_opt1_nINIT_CONF
Pul_opt2_DCLK
Pul_opt2_D(7:0)
Pul_opt2_OE
Pul_opt2_nCS
Pul_opt2_nINIT_CONF
WE#F
RP#F
AI(20:0)
RY/BY#
CE#
OE#
DQ(15:0)
PORSEL
PGM(0)
PGM(1)
PGM(2)
EXCLK
VCCW
WP#
TM1
TM0
FLASH_WE
FLASH_RP
FLASH_ADDR(20:0)
FLASH_Pul_opt1_RY/BY
FLASH_Pul_opt1_CE
FLASH_OE
FLASH_DATA(15:0)
FLASH_Pul_opt2_RY/BY
FLASH_Pul_opt2_CE
Enhanced_Config_Device
R491
R490
1kohms
J83
J82
JTAG_D20
JTAG_D21
A1
A3
A5
A7
A9
A2
A4
A6
A8
A10
J81
3m2510-6003UB
MasterBlaster PS Mode
MODIFIED 9/10/2004 10:49:56 AM
EED Department
ORIGINATOR originator DATE date
DRAWN drawn DATE date
CHECKED checked DATE date
APPROVED approved DATE date
Fermi National Accelerator Laboratory
United States Department of Energy
D:\XFT_FINDER\XFT_FINDER\XFT_FINDER.prj
SIZE D
DRAWING NUMBER drawing number
Schematic Page 17 of 18
REV A
H=8ND, V=4LA

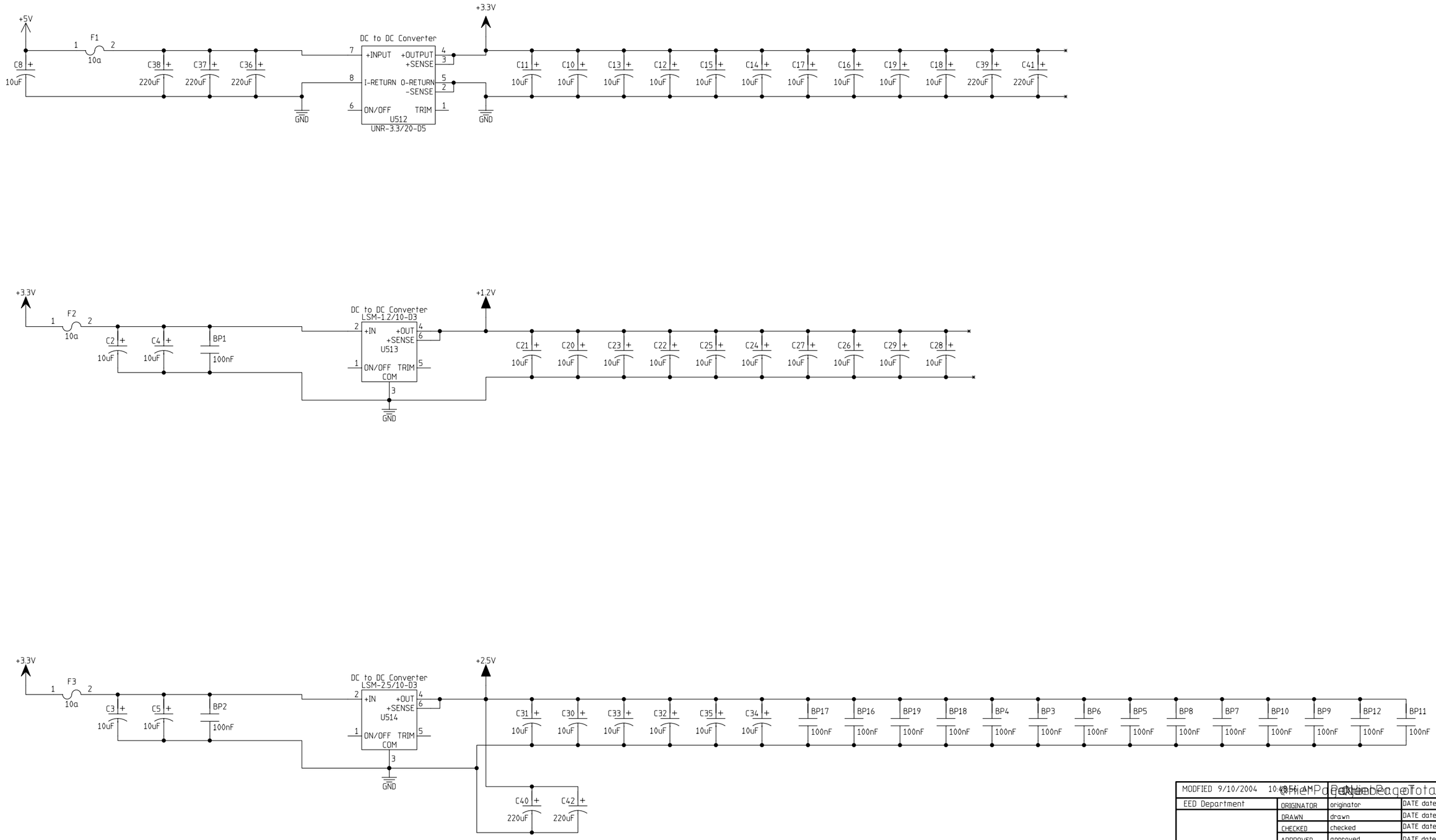

MODFIED 9/10/2004 10:48:54 AM

EED Department	ORIGINATOR	originator	DATE date
	DRAWN	drawn	DATE date
	CHECKED	checked	DATE date
	APPROVED	approved	DATE date

Fermi National Accelerator Laboratory
United States Department of Energy

D:\XFT_FINDER\XFT_FINDER\XFT_FINDER.prj

SIZE	DRAWING NUMBER	REV
D	drawing number	A

Schematic Page 18 of 18

H=8ND; V=4LA

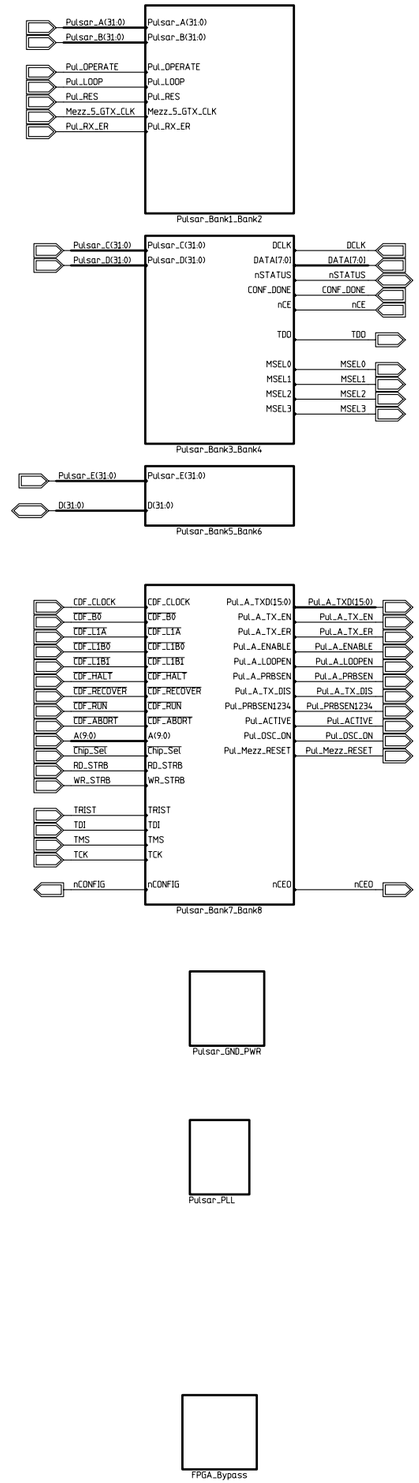

MODFIED 9/10/2004 10:48:48 AM	Page 1 of 1		
EED Department	ORIGINATOR	originator	DATE date
	DRAWN	drawn	DATE date
	CHECKED	checked	DATE date
	APPROVED	approved	DATE date

Fermi National Accelerator Laboratory
United States Department of Energy

D:\XFT_FINDER\XFT_FINDER\XFT_FINDER.prj

SIZE	DRAWING NUMBER	REV
D	drawing number Schematic Page 01 of 01	A

H=8ND; V=4LA

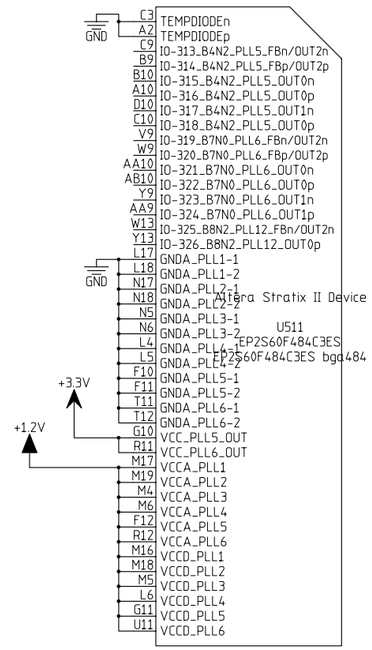

MODIFIED 9/10/2004 8:28:00 AM	Page 1 of 1		
EED Department	ORIGINATOR	originator	DATE date
	DRAWN	drawn	DATE date
	CHECKED	checked	DATE date
	APPROVED	approved	DATE date

Fermi National Accelerator Laboratory
United States Department of Energy

D:\XFT_FINDER\XFT_FINDER\XFT_FINDER.prj

SIZE	DRAWING NUMBER	Schematic Page 01 of 01	REV
D	drawing number		A

H=8ND; V=4LA

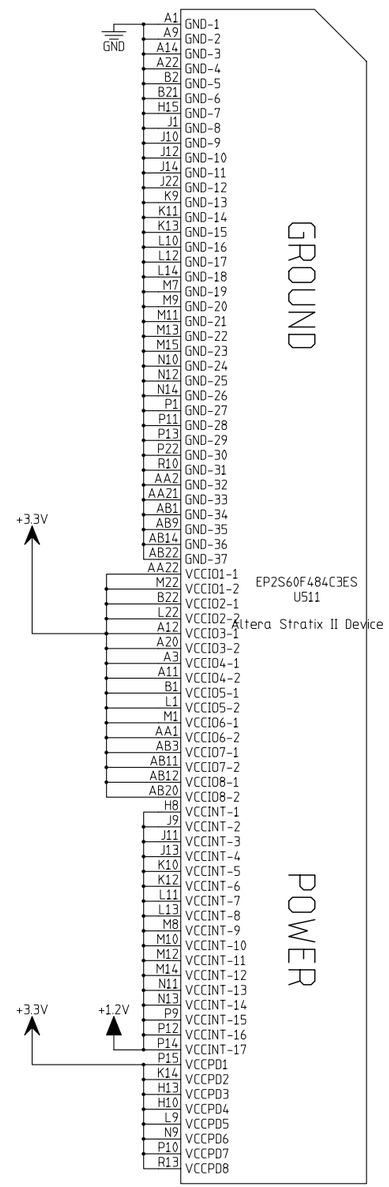

MODFIED 9/10/2004 8:28:26 AM		Other Pages: 0	Total Pages: 1
EED Department	ORIGINATOR	originator	DATE date
	DRAWN	drawn	DATE date
	CHECKED	checked	DATE date
	APPROVED	approved	DATE date

Fermi National Accelerator Laboratory
United States Department of Energy

D:\XFT_FINDER\XFT_FINDER\XFT_FINDER.prj

SIZE	DRAWING NUMBER	REV
D	drawing number Schematic Page 01 of 01	A

H=8ND, V=4LA

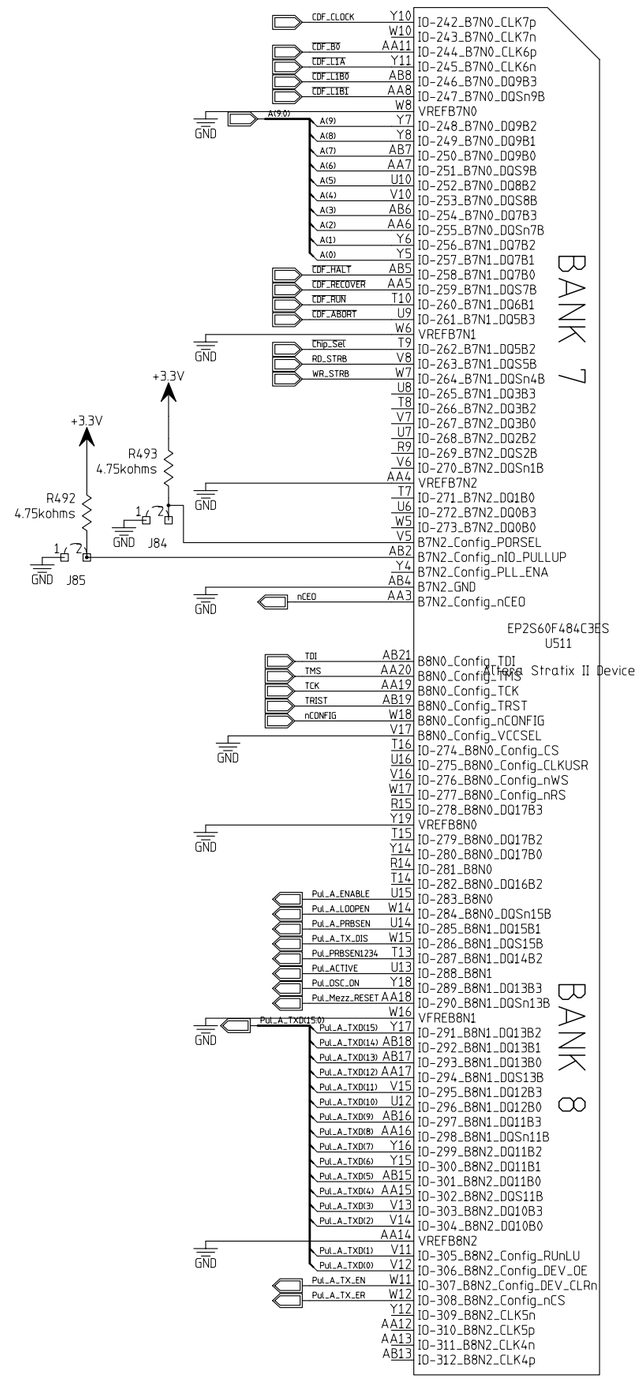

MODIFIED 9/9/2004 3:10:55 PM			
EED Department	ORIGINATOR	originator	DATE date
	DRAWN	drawn	DATE date
	CHECKED	checked	DATE date
	APPROVED	approved	DATE date

Fermi National Accelerator Laboratory
United States Department of Energy

D:\XFT_FINDER\XFT_FINDER\XFT_FINDER.prj

SIZE	DRAWING NUMBER	REV
D	drawing number	A

Schematic Page 01 of 01

H=8ND, V=4LA

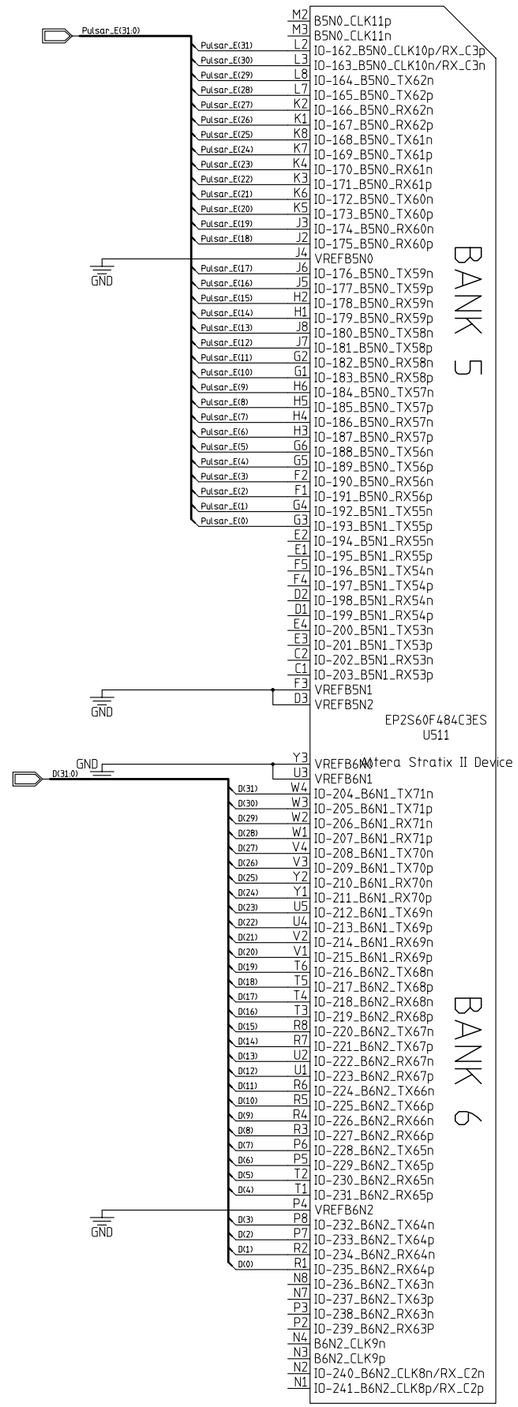

MODIFIED 9/10/2004 8:28:08 PM		Page 01 of 01	
EED Department	ORIGINATOR	originator	DATE date
	DRAWN	drawn	DATE date
	CHECKED	checked	DATE date
	APPROVED	approved	DATE date

Fermi National Accelerator Laboratory
United States Department of Energy

D:\XFT_FINDER\XFT_FINDER\XFT_FINDER.prj

SIZE	DRAWING NUMBER	REV
D	drawing number Schematic Page 01 of 01	A

H=BND. V=4LA

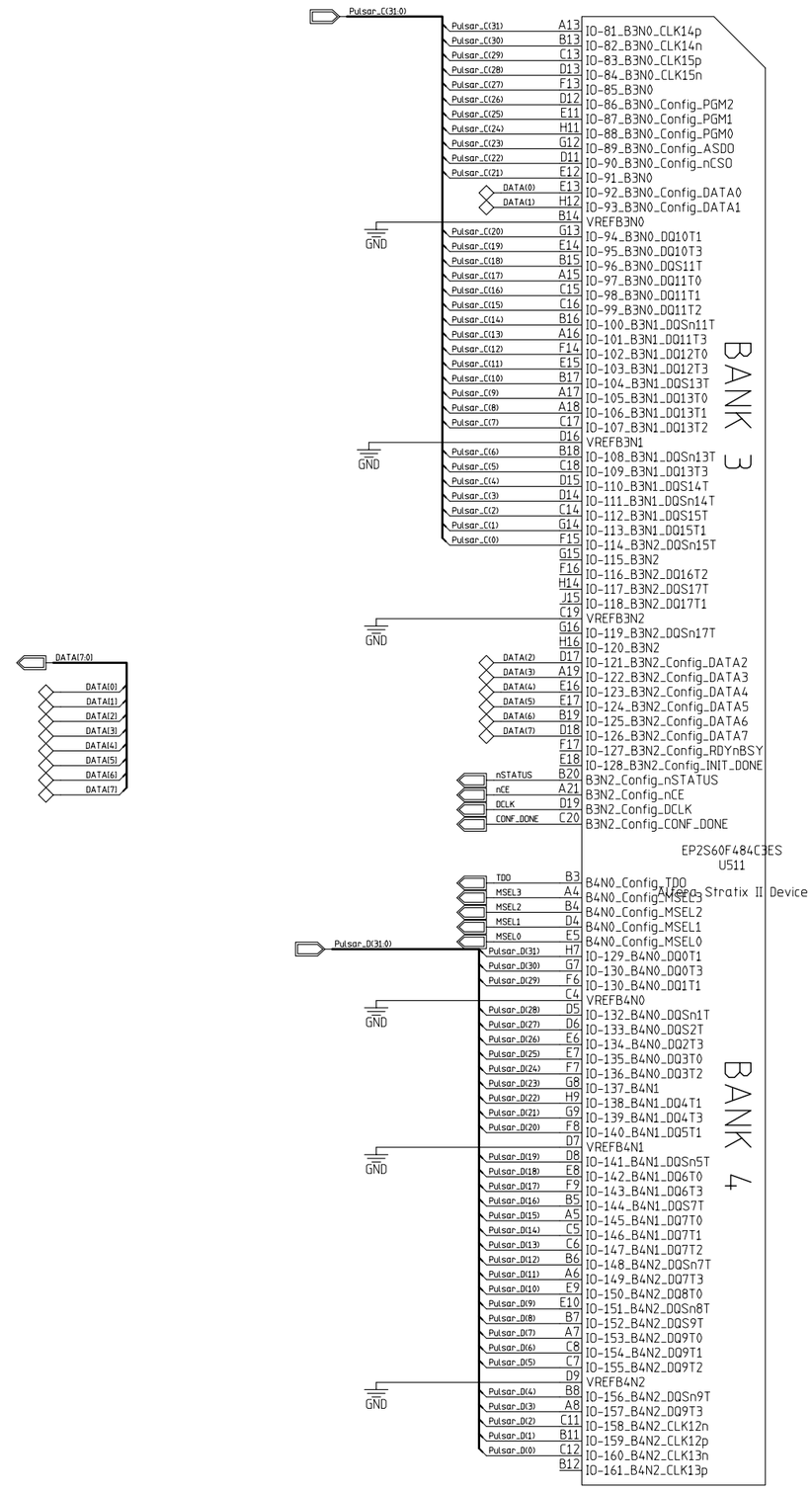

MODIFIED 9/10/2004 8:28:31 AM

EED Department	ORIGINATOR	originator	DATE date
	DRAWN	drawn	DATE date
	CHECKED	checked	DATE date
	APPROVED	approved	DATE date

Fermi National Accelerator Laboratory
United States Department of Energy

D:\XFT_FINDER\XFT_FINDER\XFT_FINDER.prj

SIZE	DRAWING NUMBER	REV
D	drawing number	A

Schematic Page 01 of 01

H=BND, V=4LA

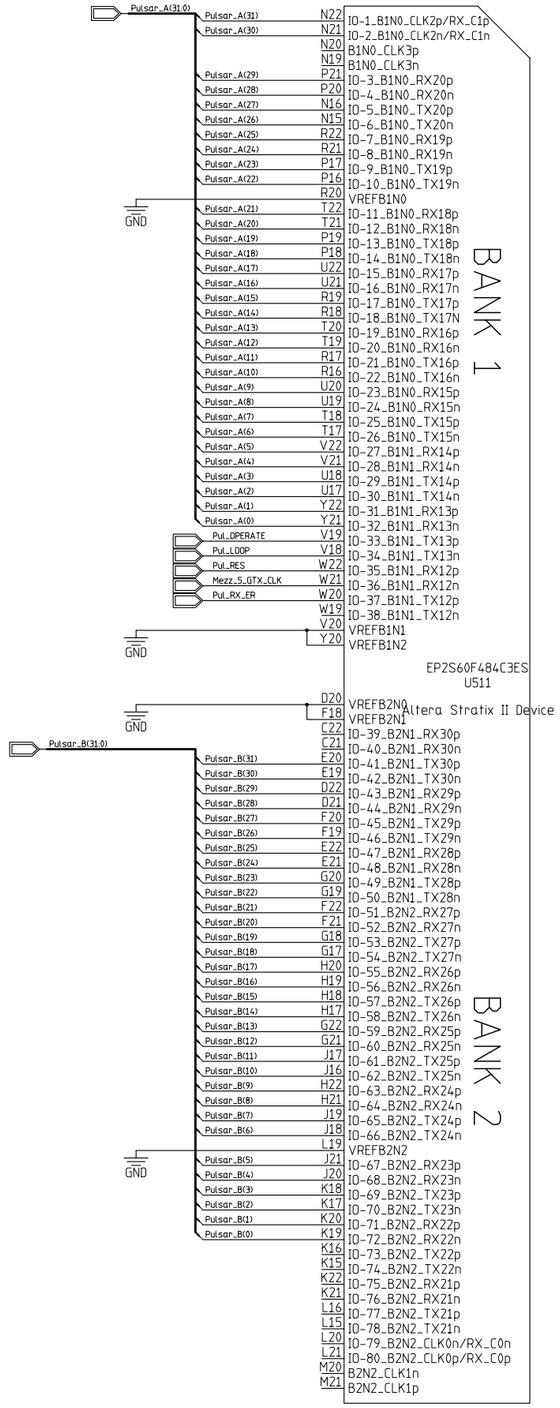

MODFIED 9/9/2004 3:09:01 PM		Other Pages Referenced	Total Pages
EED Department	ORIGINATOR	originator	DATE date
	DRAWN	drawn	DATE date
	CHECKED	checked	DATE date
	APPROVED	approved	DATE date

Fermi National Accelerator Laboratory
United States Department of Energy

D:\XFT_FINDER\XFT_FINDER\XFT_FINDER.prj

SIZE	DRAWING NUMBER	REV
D	drawing number Schematic Page 01 of 01	A

H=8ND, V=4LA

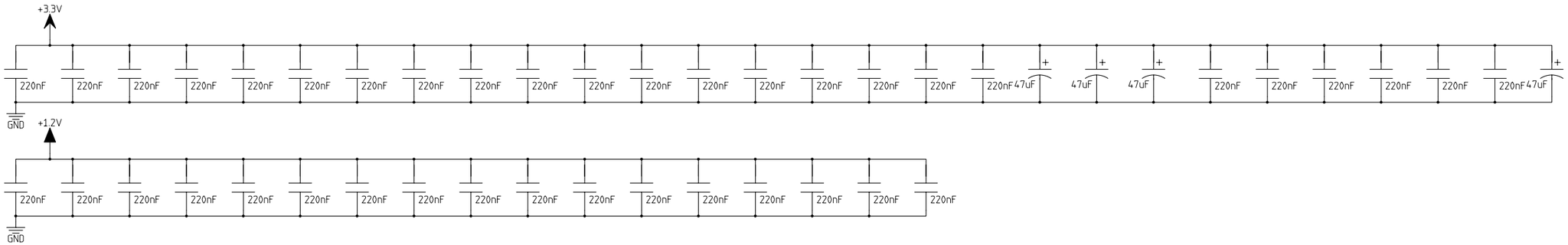

MODFIED 9/9/2004 3:11:37 PM		Page 1 of 1	
EED Department	ORIGINATOR	originator	DATE date
	DRAWN	drawn	DATE date
	CHECKED	checked	DATE date
	APPROVED	approved	DATE date

Fermi National Accelerator Laboratory
United States Department of Energy

D:\XFT_FINDER\XFT_FINDER\XFT_FINDER.prj

SIZE	DRAWING NUMBER	REV
D	drawing number Schematic Page 01 of 01	A

H=8ND; V=4LA

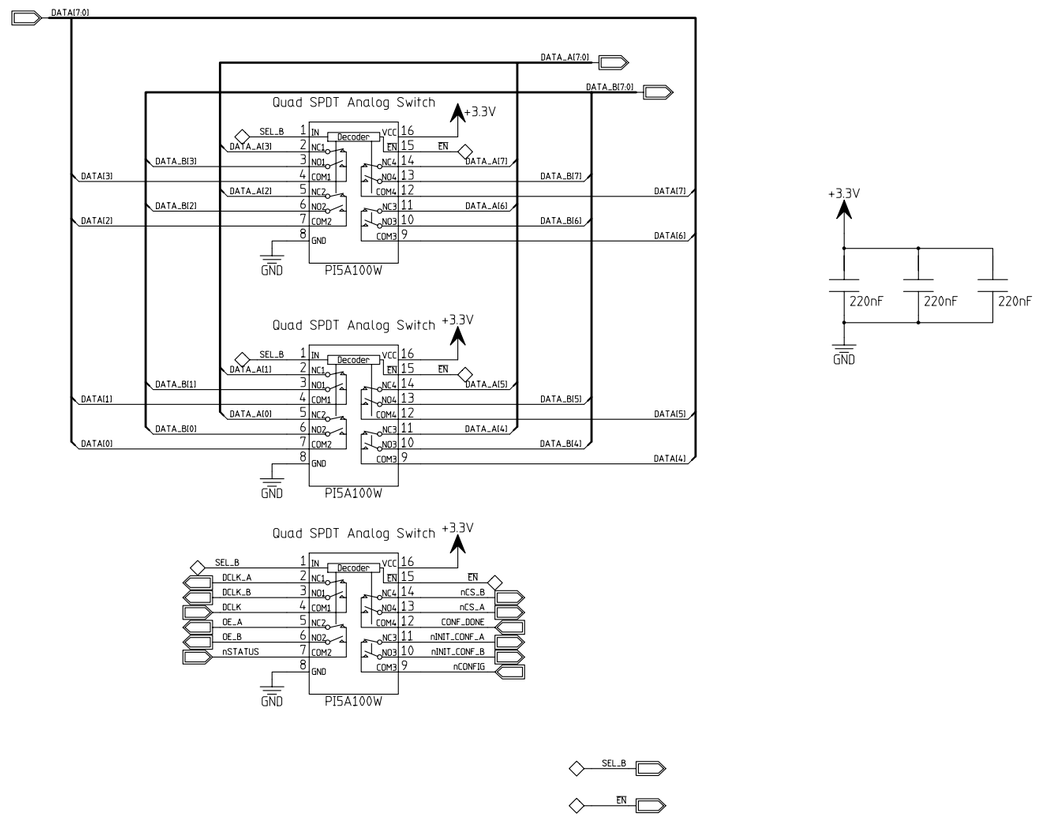

MODFIED 9/9/2004 3:19:23 PM	Page 1 of 1		
EED Department	ORIGINATOR	originator	DATE date
	DRAWN	drawn	DATE date
	CHECKED	checked	DATE date
	APPROVED	approved	DATE date

Fermi National Accelerator Laboratory
United States Department of Energy

D:\XFT_FINDER\XFT_FINDER\XFT_FINDER.prj

SIZE	DRAWING NUMBER	REV
D	drawing number	A

Schematic Page 01 of 01

OnlerPageNumber Page Total

H=8ND; V=4LA

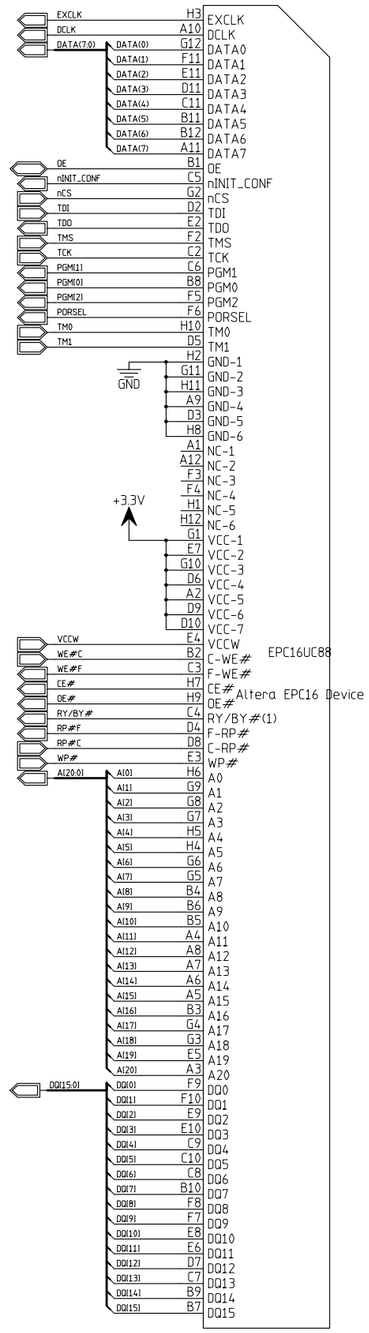

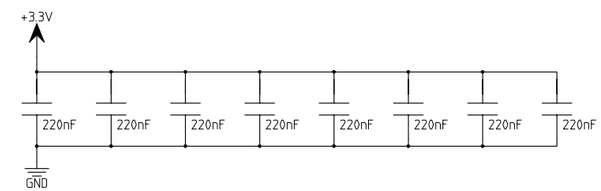

MODFIED 9/9/2004 3:18:22 PM	Page 1 of 1		
EED Department	ORIGINATOR	originator	DATE date
	DRAWN	drawn	DATE date
	CHECKED	checked	DATE date
	APPROVED	approved	DATE date

Fermi National Accelerator Laboratory
United States Department of Energy

D:\XFT_FINDER\XFT_FINDER\XFT_FINDER.prj

SIZE	DRAWING NUMBER	REV
D	drawing number Schematic Page 01 of 01	A

H=8ND; V=4LA

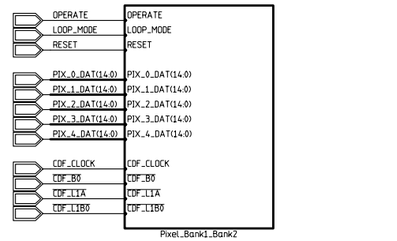

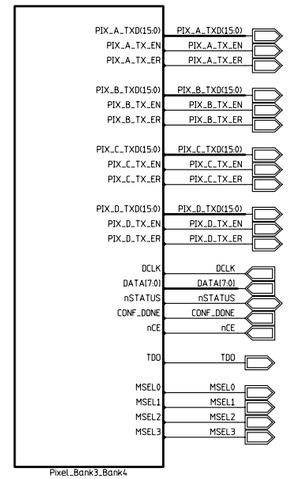

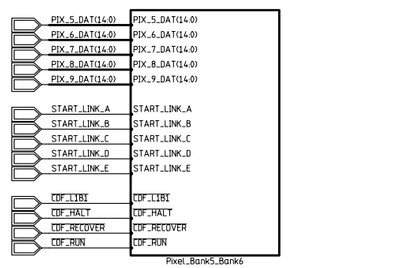

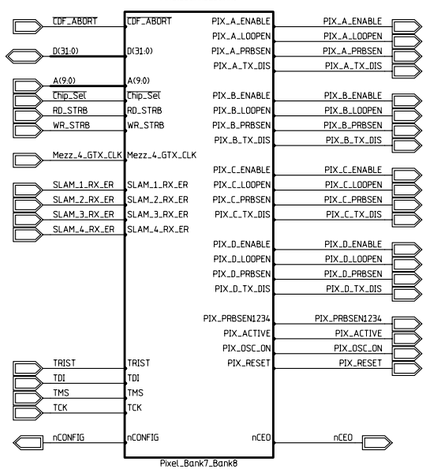

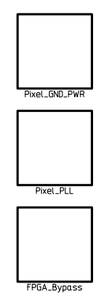

MODIFIED 9/9/2004 3:00:00 PM			
EED Department	ORIGINATOR	originator	DATE date
	DRAWN	drawn	DATE date
	CHECKED	checked	DATE date
	APPROVED	approved	DATE date

Fermi National Accelerator Laboratory
United States Department of Energy

D:\XFT_FINDER\XFT_FINDER\XFT_FINDER.prj

SIZE	DRAWING NUMBER	REV
D	drawing number	A

Schematic Page 01 of 01

H=BND; V=4LA

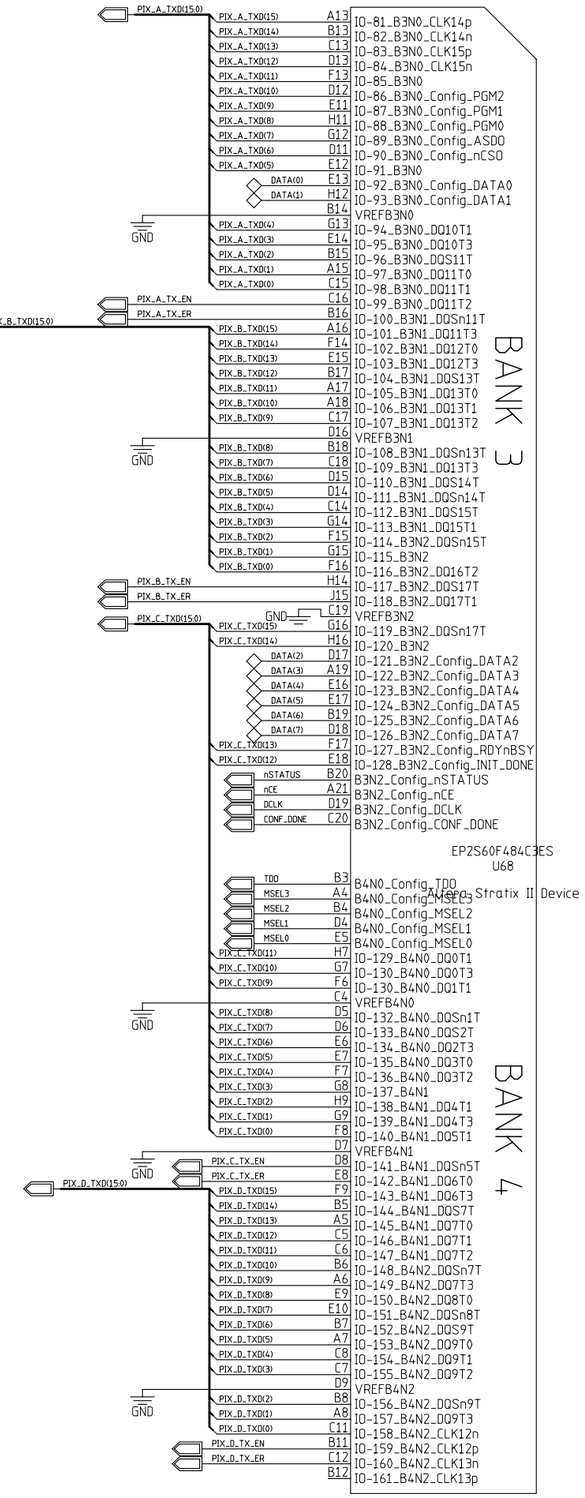

MODIFIED 9/7/2004 3:42:02 PM		Other Pages: 0	Total Pages: 1
EED Department	ORIGINATOR	originator	DATE date
	DRAWN	drawn	DATE date
	CHECKED	checked	DATE date
	APPROVED	approved	DATE date

Fermi National Accelerator Laboratory
United States Department of Energy

D:\XFT_FINDER\XFT_FINDER\XFT_FINDER.prj

SIZE	DRAWING NUMBER	REV
D	drawing number Schematic Page 01 of 01	A

H=8ND, V=4LA

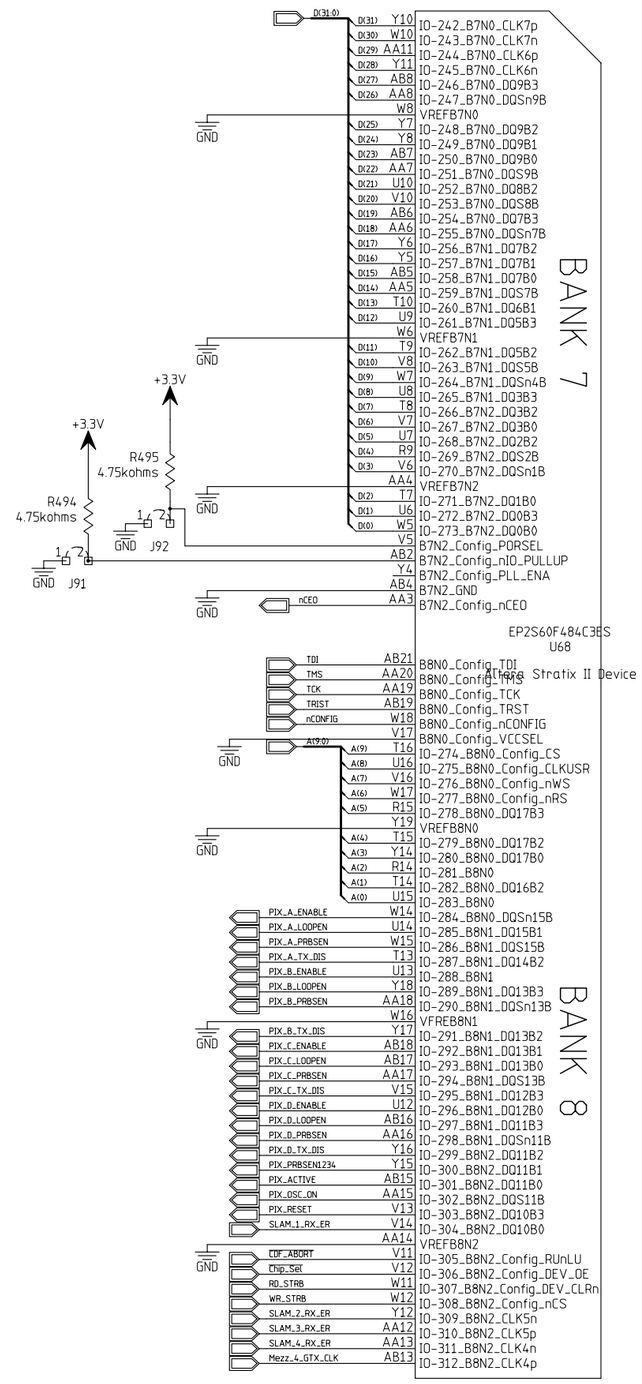

MODIFIED 9/9/2004 3:00:01 PM		Sheet 1 of 1	
EED Department	ORIGINATOR	originator	DATE date
	DRAWN	drawn	DATE date
	CHECKED	checked	DATE date
	APPROVED	approved	DATE date

Fermi National Accelerator Laboratory
United States Department of Energy

D:\XFT_FINDER\XFT_FINDER\XFT_FINDER.prj

SIZE	DRAWING NUMBER	REV
D	drawing number	A

Schematic Page 01 of 01

H=8ND, V=4LA

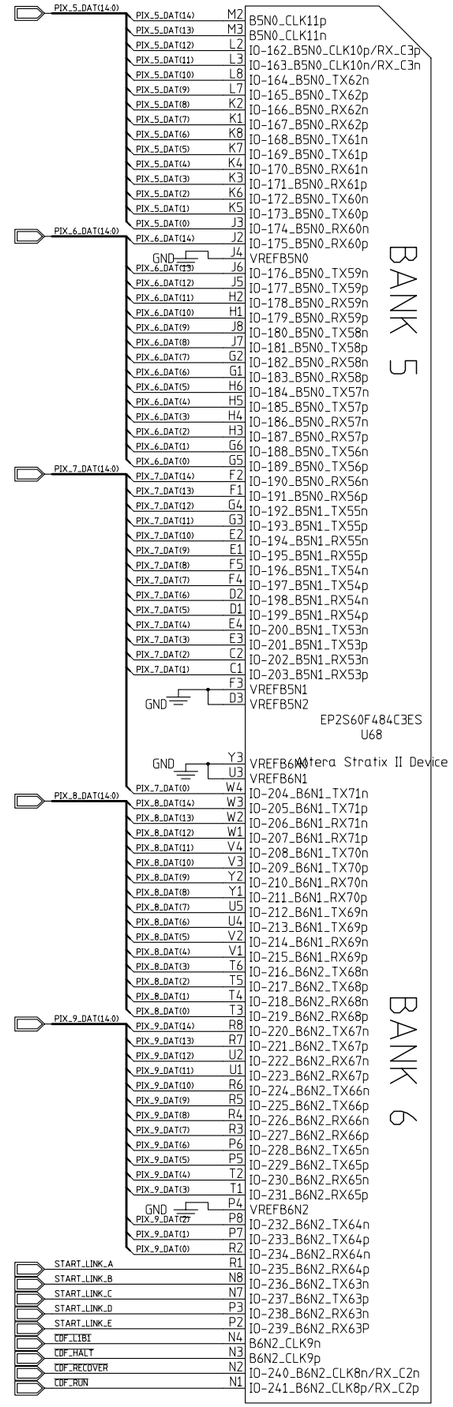

MODIFIED 9/7/2004 3:11:01 PM

©HierPageNumber©Total

EED Department	ORIGINATOR	originator	DATE date
	DRAWN	drawn	DATE date
	CHECKED	checked	DATE date
	APPROVED	approved	DATE date

Fermi National Accelerator Laboratory
United States Department of Energy

D:\XFT_FINDER\XFT_FINDER\XFT_FINDER.prj

SIZE	DRAWING NUMBER	REV
D	drawing number Schematic Page 01 of 01	A

H=BND; V=4LA

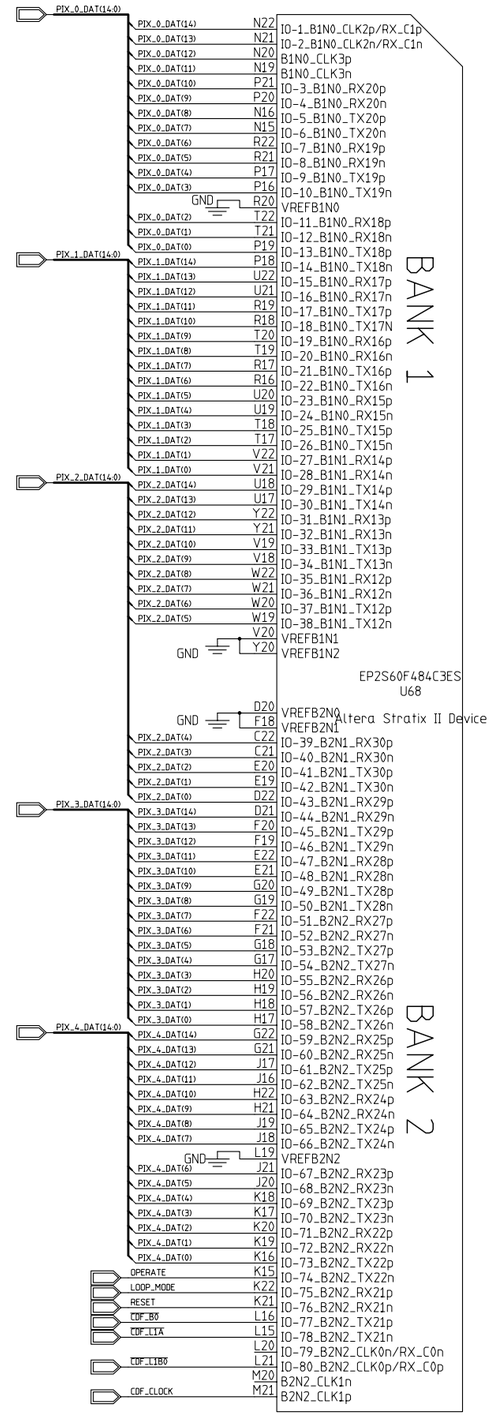

MODFIED 9/7/2004 2:52:17 PM		Page 1 of 1	
EED Department	ORIGINATOR	originator	DATE date
	DRAWN	drawn	DATE date
	CHECKED	checked	DATE date
	APPROVED	approved	DATE date

Fermi National Accelerator Laboratory
United States Department of Energy

D:\XFT_FINDER\XFT_FINDER\XFT_FINDER.prj

SIZE	DRAWING NUMBER	REV
D	drawing number	A

Schematic Page 01 of 01

H=8ND; V=4LA

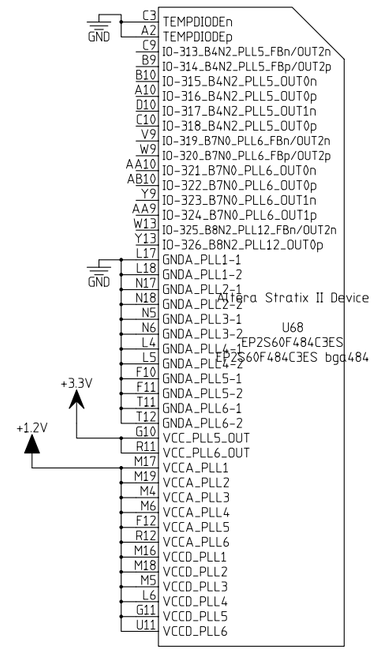

MODIFIED 9/7/2004 11:10:54 AM		Page 1 of 1	
EED Department	ORIGINATOR	originator	DATE date
	DRAWN	drawn	DATE date
	CHECKED	checked	DATE date
	APPROVED	approved	DATE date

Fermi National Accelerator Laboratory
United States Department of Energy

D:\XFT_FINDER\XFT_FINDER\XFT_FINDER.prj

SIZE	DRAWING NUMBER	REV
D	drawing number Schematic Page 01 of 01	A

H=8ND, V=4LA

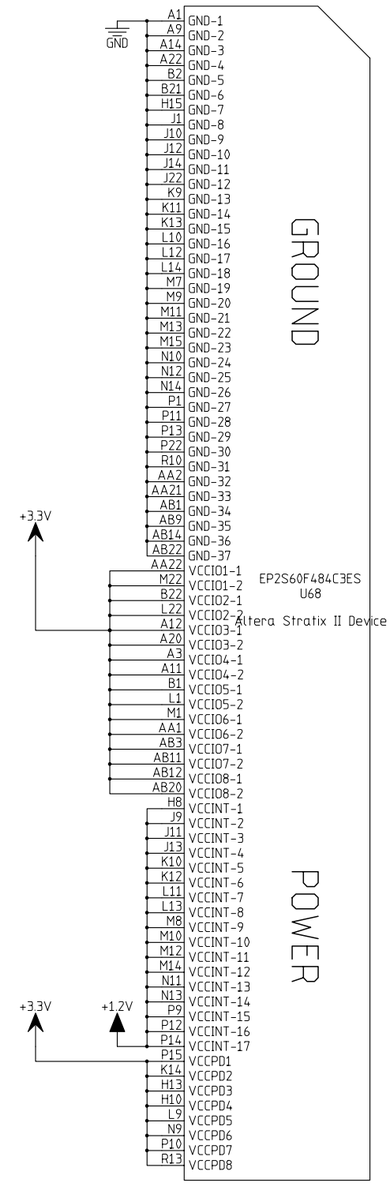

MODFIED 9/7/2004 11:10:14 AM	Chief Page Number	Page Total	
EED Department	ORIGINATOR	originator	DATE date
	DRAWN	drawn	DATE date
	CHECKED	checked	DATE date
	APPROVED	approved	DATE date

Fermi National Accelerator Laboratory
United States Department of Energy

D:\XFT_FINDER\XFT_FINDER\XFT_FINDER.prj

SIZE	DRAWING NUMBER	REV
D	drawing number	A

Schematic Page 01 of 01

H=8ND; V=4LA

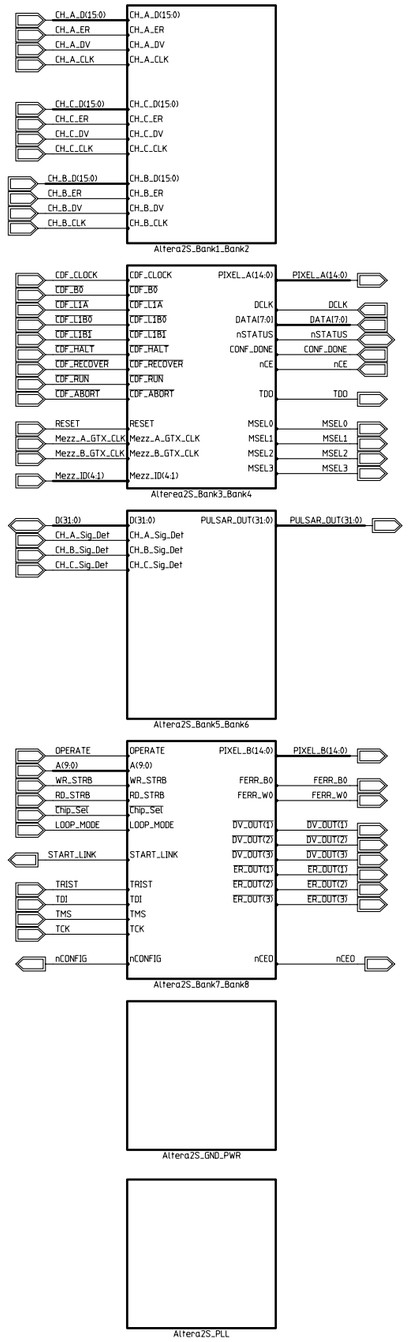

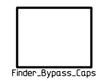

MODIFIED 9/9/2004 4:06:04 PM

EED Department	ORIGINATOR	originator	DATE date
	DRAWN	drawn	DATE date
	CHECKED	checked	DATE date
	APPROVED	approved	DATE date

Fermi National Accelerator Laboratory
United States Department of Energy

D:\XFT_FINDER\XFT_FINDER\XFT_FINDER.prj

SIZE	DRAWING NUMBER	REV
D	drawing number	A

Schematic Page 01 of 01

H=BND, V=4LA

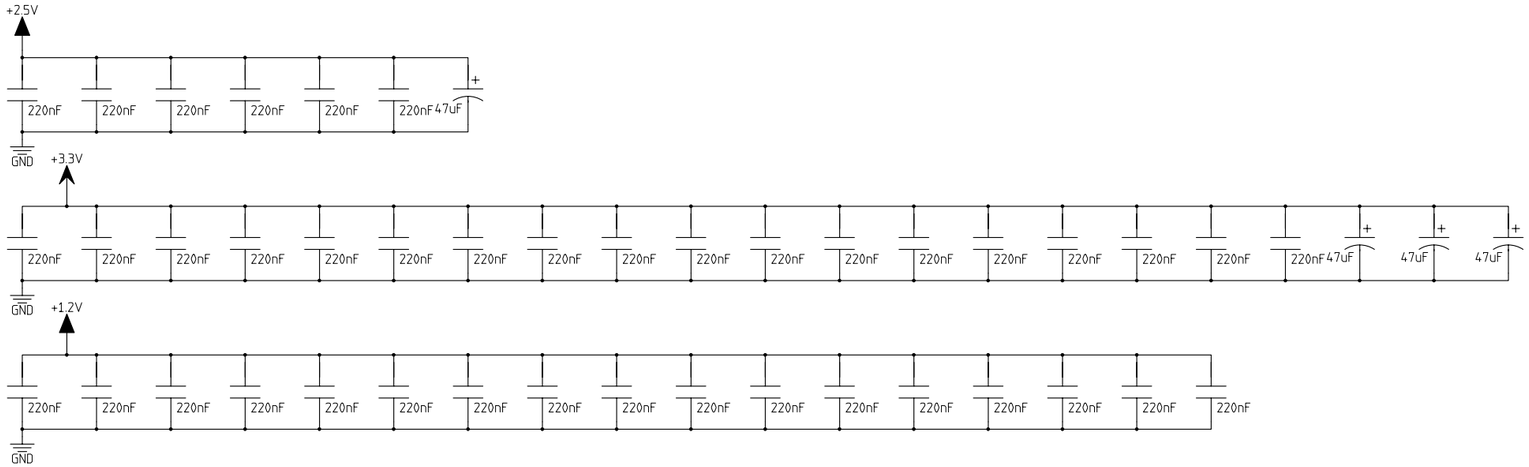

MODFIED 9/9/2004 3:12:06 PM		Page 1 of 1	
EED Department	ORIGINATOR	originator	DATE date
	DRAWN	drawn	DATE date
	CHECKED	checked	DATE date
	APPROVED	approved	DATE date

Fermi National Accelerator Laboratory
United States Department of Energy

D:\XFT_FINDER\XFT_FINDER\XFT_FINDER.prj

SIZE	DRAWING NUMBER	REV
D	drawing number Schematic Page 01 of 01	A

H=8ND; V=4LA

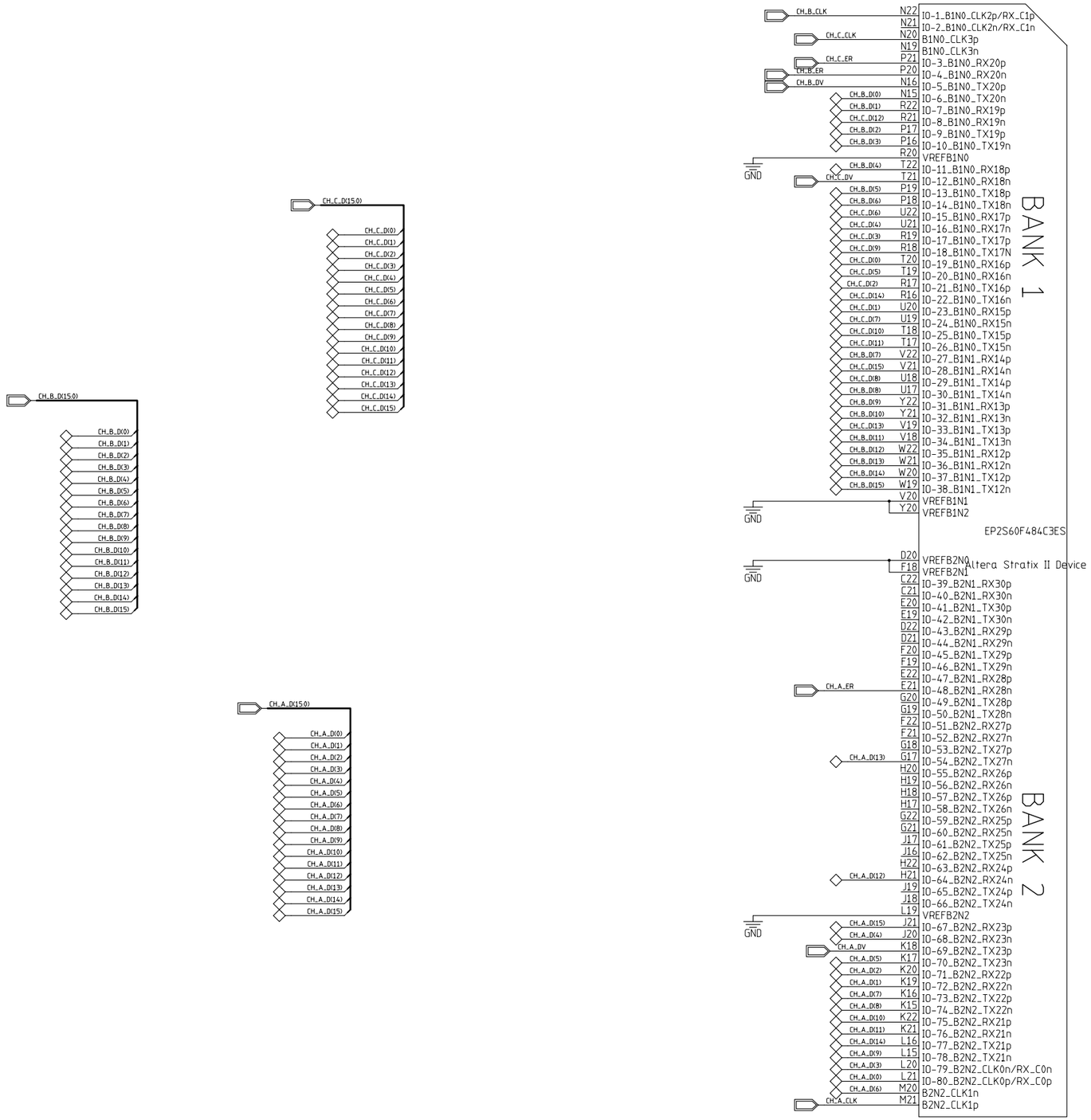

MODFIED 9/9/2004 4:01:16 PM		Sheet Page of Total	
EED Department	ORIGINATOR	originator	DATE date
	DRAWN	drawn	DATE date
	CHECKED	checked	DATE date
	APPROVED	approved	DATE date

Fermi National Accelerator Laboratory
United States Department of Energy

D:\XFT_FINDER\XFT_FINDER\XFT_FINDER.prj

SIZE	DRAWING NUMBER	REV
D	drawing number Schematic Page 01 of 01	A

OrcinerPadeBlue_eT

H=8ND; V=4LA

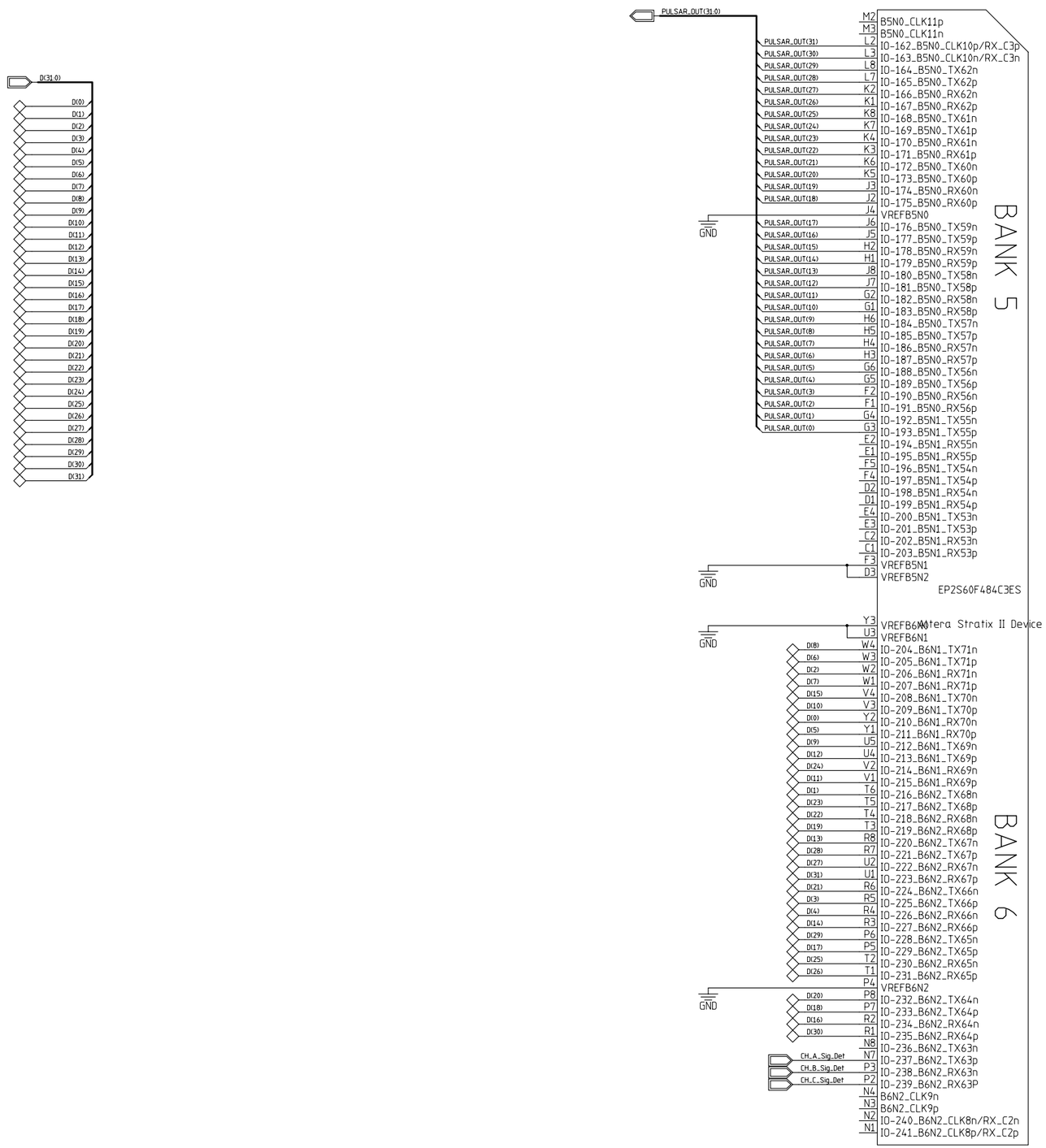

MODFIED 9/7/2004 10:47:20 AM

EED Department	ORIGINATOR	originator	DATE date
	DRAWN	drawn	DATE date
	CHECKED	checked	DATE date
	APPROVED	approved	DATE date

Fermi National Accelerator Laboratory
United States Department of Energy

D:\XFT_FINDER\XFT_FINDER\XFT_FINDER.prj

SIZE	DRAWING NUMBER	REV
D	drawing number	A

Schematic Page 01 of 01

H=8ND; V=4LA

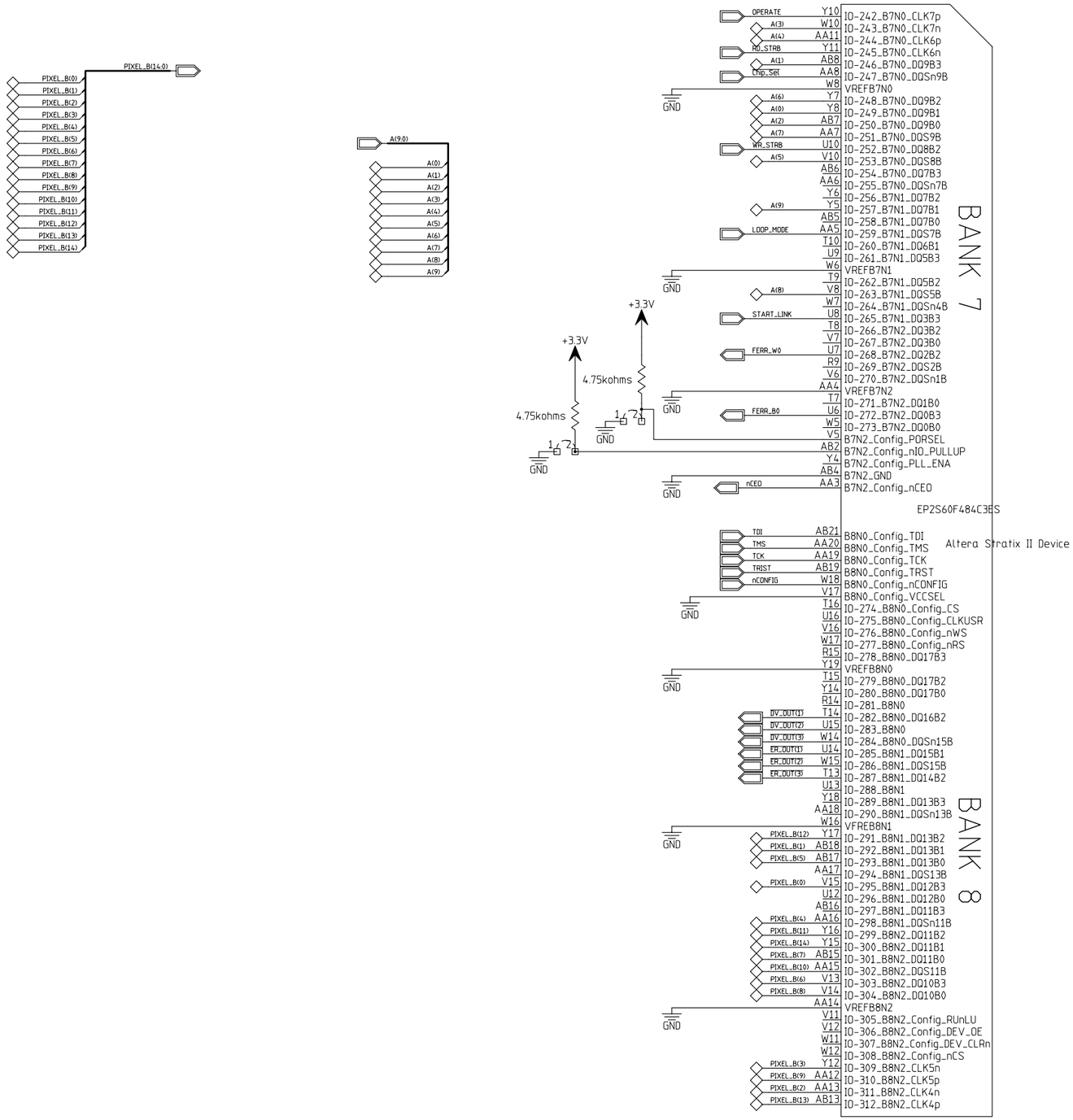

MODFIED 8/31/2004 10:50:14 AM	Page 1 of 1		
EED Department	ORIGINATOR	originator	DATE date
	DRAWN	drawn	DATE date
	CHECKED	checked	DATE date
	APPROVED	approved	DATE date

Fermi National Accelerator Laboratory
United States Department of Energy

D:\XFT_FINDER\XFT_FINDER\XFT_FINDER.prj

SIZE	DRAWING NUMBER	REV
D	drawing number	A

Schematic Page 01 of 01

H=8ND; V=4LA

MODIFIED 9/9/2004 2:12:37 PM		Page Number 2 of Total Pages	
EED Department	ORIGINATOR	originator	DATE date
	DRAWN	drawn	DATE date
	CHECKED	checked	DATE date
	APPROVED	approved	DATE date

Fermi National Accelerator Laboratory
United States Department of Energy

D:\XFT_FINDER\XFT_FINDER\XFT_FINDER.prj

SIZE	DRAWING NUMBER	REV
D	drawing number Schematic Page 01 of 01	A

H=8ND, V=4LA

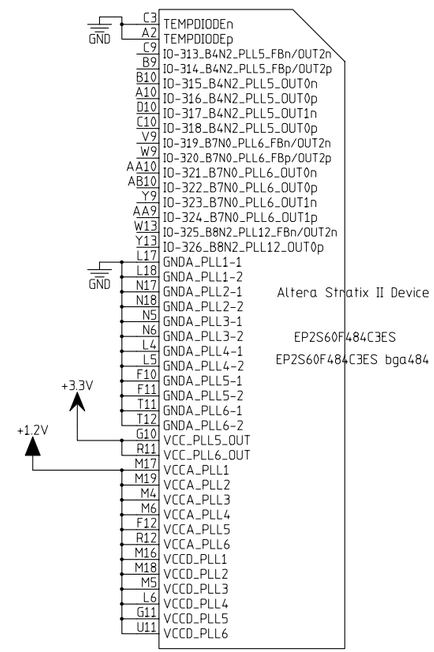

MODFIED 8/30/2004 9:20:52 AM	Chief Page Number 2	Page Number 2	Total
EED Department	ORIGINATOR	originator	DATE date
	DRAWN	drawn	DATE date
	CHECKED	checked	DATE date
	APPROVED	approved	DATE date

Fermi National Accelerator Laboratory
United States Department of Energy

D:\XFT_FINDER\XFT_FINDER\XFT_FINDER.prj

SIZE	DRAWING NUMBER	Schematic Page 01 of 01	REV
D	drawing number		A

H=8ND; V=4LA

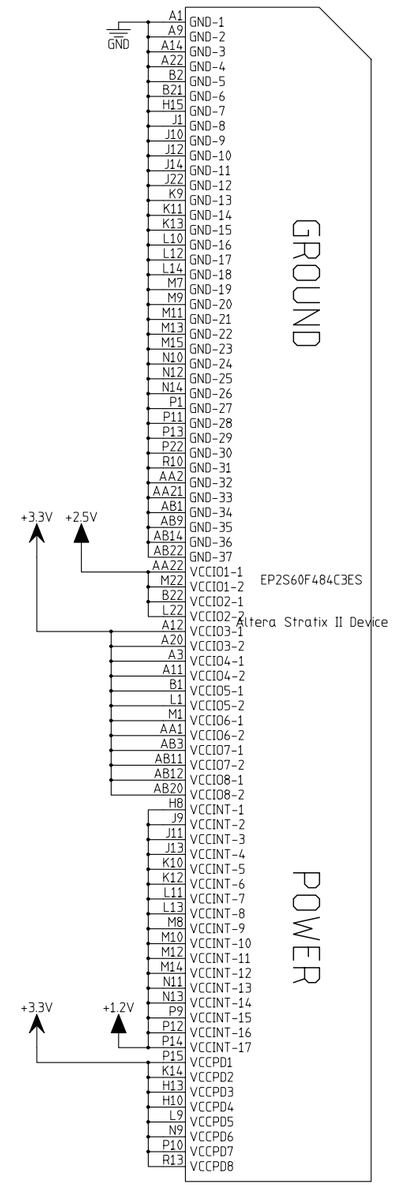

MODFIED 9/7/2004 10:41:05 AM	Page 1 of 1		
EED Department	ORIGINATOR	originator	DATE date
	DRAWN	drawn	DATE date
	CHECKED	checked	DATE date
	APPROVED	approved	DATE date

Fermi National Accelerator Laboratory
United States Department of Energy

D:\XFT_FINDER\XFT_FINDER\XFT_FINDER.prj

SIZE	DRAWING NUMBER	REV
D	drawing number	A

Schematic Page 01 of 01

H=8ND; V=4LA

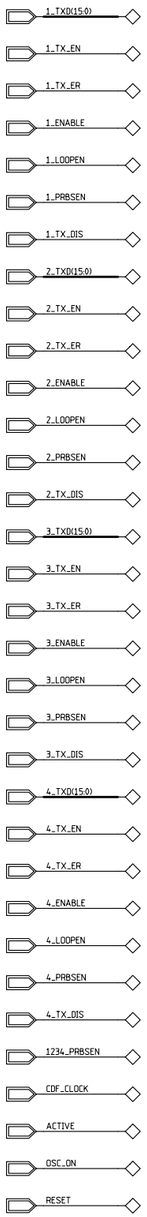

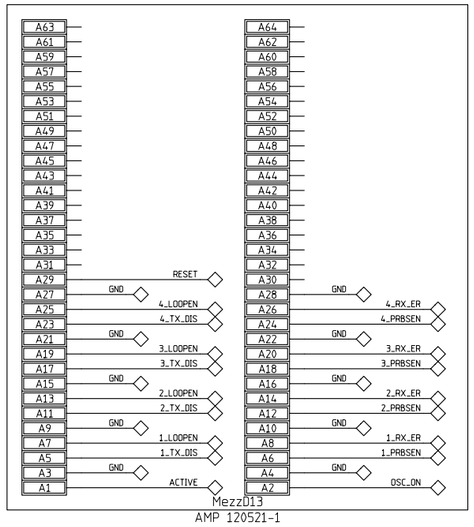

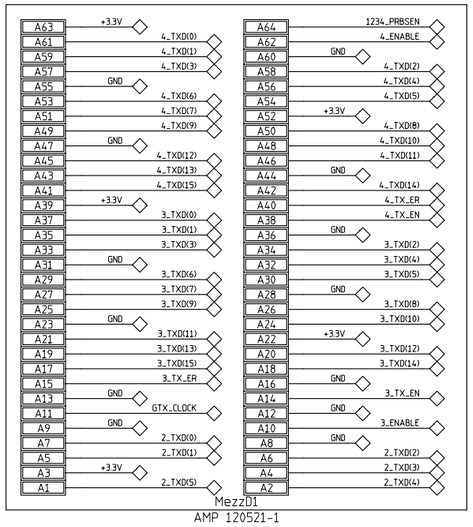

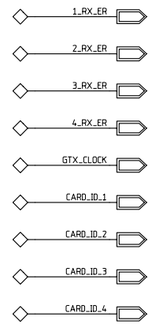

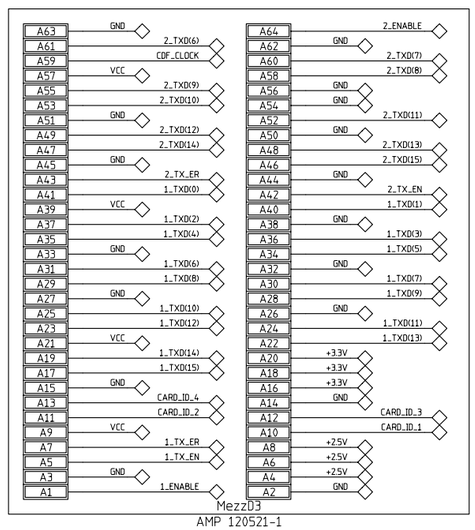

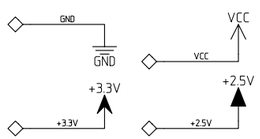

MODIFIED 9/10/2004 10:42 PM AMPCAD Version 9.0 Page 1 of 1

EED Department	ORIGINATOR	originator	DATE date
	DRAWN	drawn	DATE date
	CHECKED	checked	DATE date
	APPROVED	approved	DATE date

Fermi National Accelerator Laboratory
United States Department of Energy

D:\XFT_FINDER\XFT_FINDER\XFT_FINDER.prj

SIZE	DRAWING NUMBER	REV
D	drawing number	A

Schematic Page 01 of 01

H=8ND, V=4LA

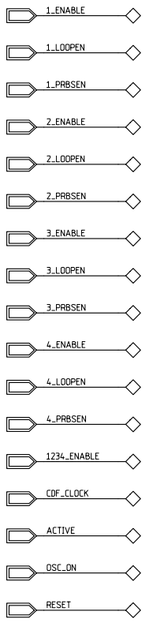

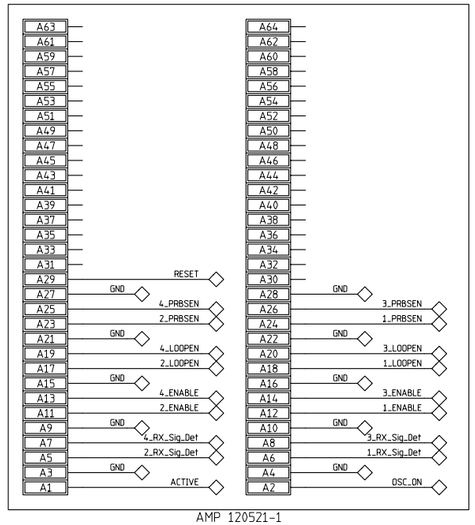

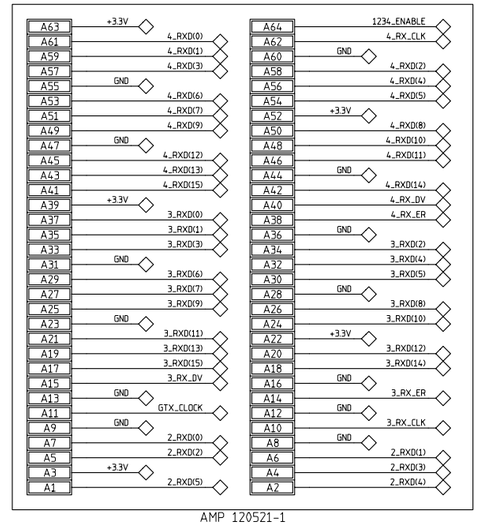

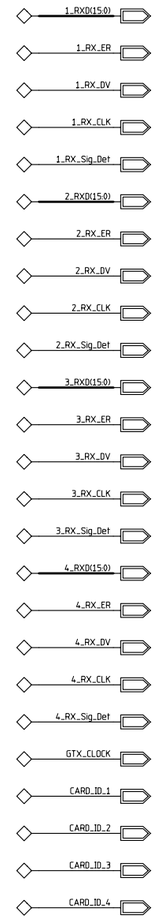

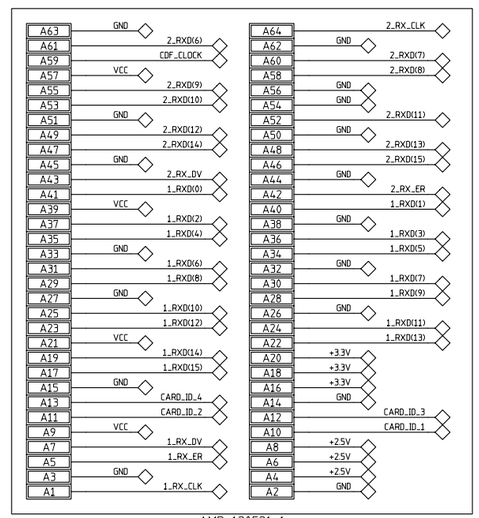

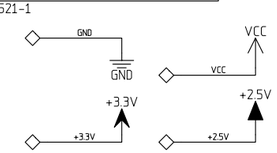

MODIFIED 9/10/2004 10:43AM AMPad Rev 1.0 Page 1 of 1

EED Department	ORIGINATOR	originator	DATE date
	DRAWN	drawn	DATE date
	CHECKED	checked	DATE date
	APPROVED	approved	DATE date

Fermi National Accelerator Laboratory
United States Department of Energy

D:\XFT_FINDER\XFT_FINDER\XFT_FINDER.prj

SIZE	DRAWING NUMBER	REV
D	drawing number	A

Schematic Page 01 of 01

H=8ND, V=4LA

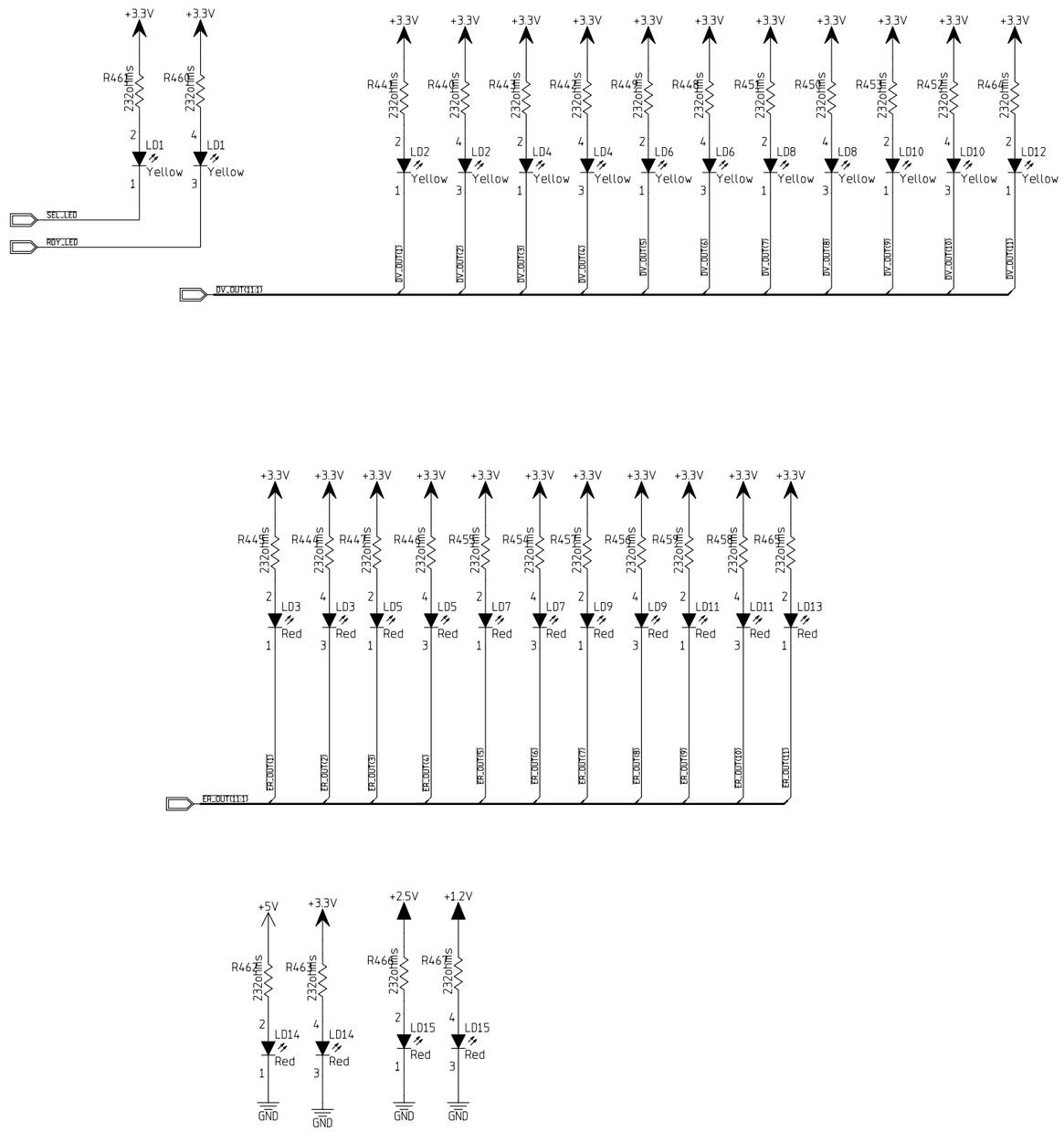

MODFIED 9/7/2004 11:23:59 AM		Page 1	Total
EED Department	ORIGINATOR	originator	DATE date
	DRAWN	drawn	DATE date
	CHECKED	checked	DATE date
	APPROVED	approved	DATE date

Fermi National Accelerator Laboratory
United States Department of Energy

D:\XFT_FINDER\XFT_FINDER\XFT_FINDER.prj

SIZE	DRAWING NUMBER	Schematic Page 01 of 01	REV
D	drawing number		A

H=8ND; V=4LA

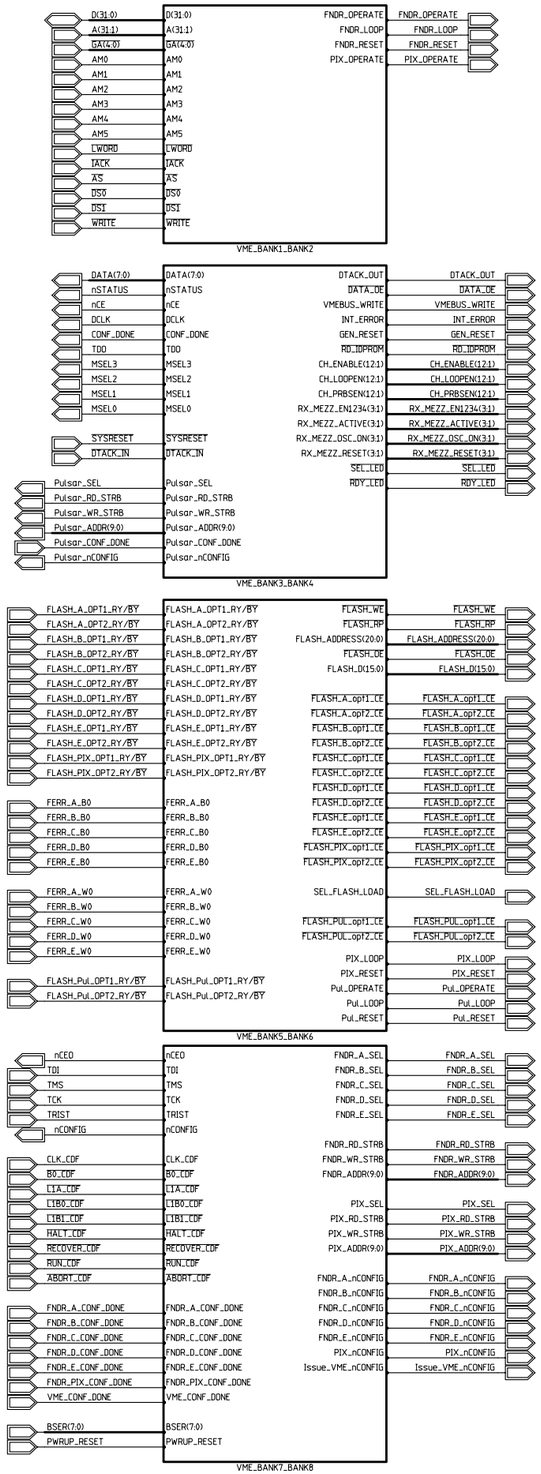

MODIFIED 9/9/2004 2:48:08 PM		Page 1 of 1	
EED Department	ORIGINATOR	originator	DATE date
	DRAWN	drawn	DATE date
	CHECKED	checked	DATE date
	APPROVED	approved	DATE date

Fermi National Accelerator Laboratory
United States Department of Energy

D:\XFT_FINDER\XFT_FINDER\XFT_FINDER.prj

SIZE	DRAWING NUMBER	REV
D	drawing number	A

Schematic Page 01 of 01

H=8ND; V=4LA

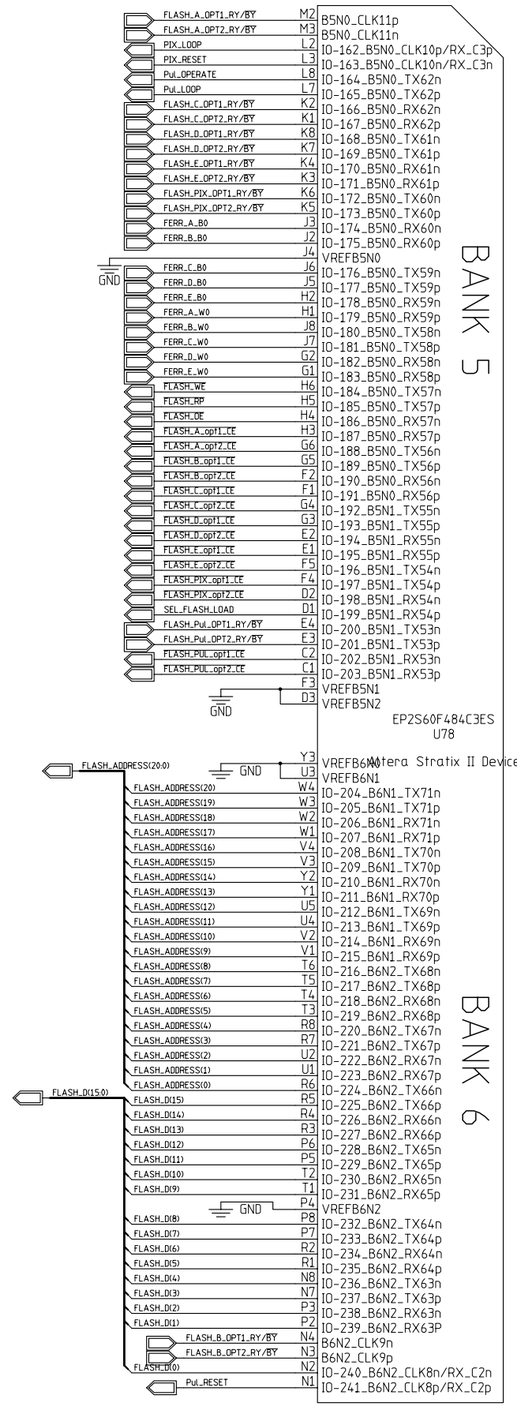

MODIFIED 9/9/2004 2:48:11 PM		CREATED	DATE date
EED Department	ORIGINATOR	originator	DATE date
	DRAWN	drawn	DATE date
	CHECKED	checked	DATE date
	APPROVED	approved	DATE date

Fermi National Accelerator Laboratory
United States Department of Energy

D:\XFT_FINDER\XFT_FINDER\XFT_FINDER.prj

SIZE	DRAWING NUMBER	REV
D	drawing number	A

Schematic Page 01 of 01

Owner Page 1 of 1 Total

H=BND; V=4LA

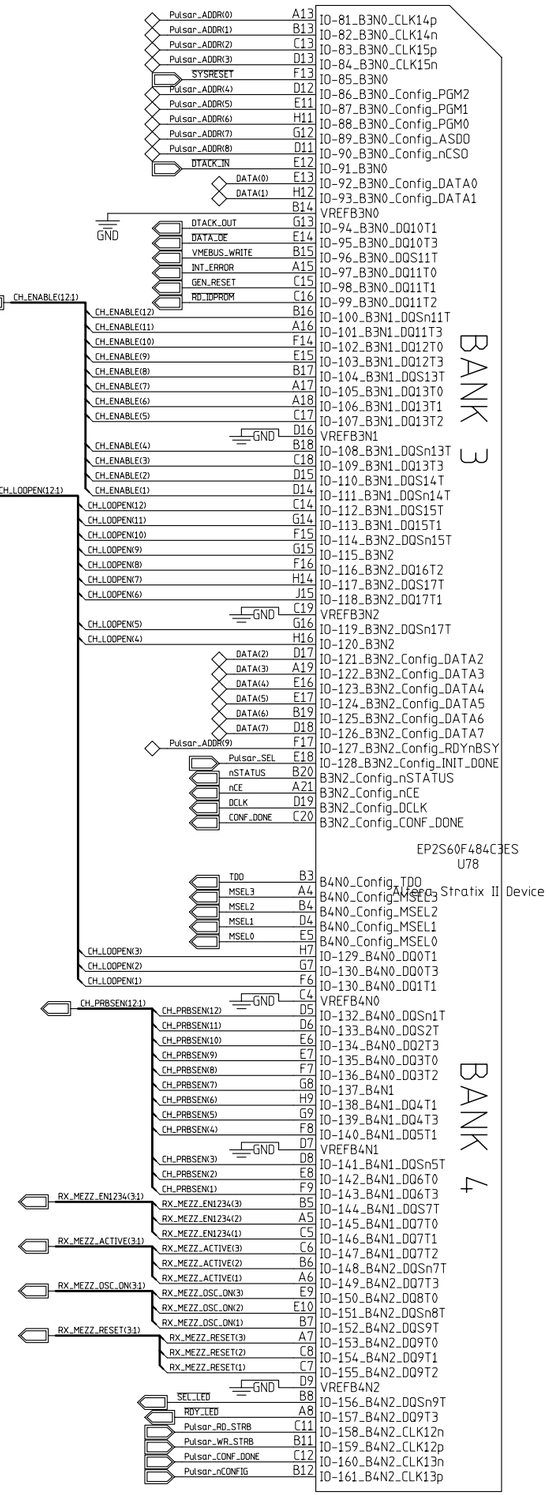

MODIFIED 9/7/2004 2:08:52 PM		Other Pages: 0	Total Pages: 1
EED Department	ORIGINATOR	originator	DATE date
	DRAWN	drawn	DATE date
	CHECKED	checked	DATE date
	APPROVED	approved	DATE date

Fermi National Accelerator Laboratory
United States Department of Energy

D:\XFT_FINDER\XFT_FINDER\XFT_FINDER.prj

SIZE	DRAWING NUMBER		REV
D	drawing number	Schematic Page 01 of 01	A

H=8ND, V=4LA

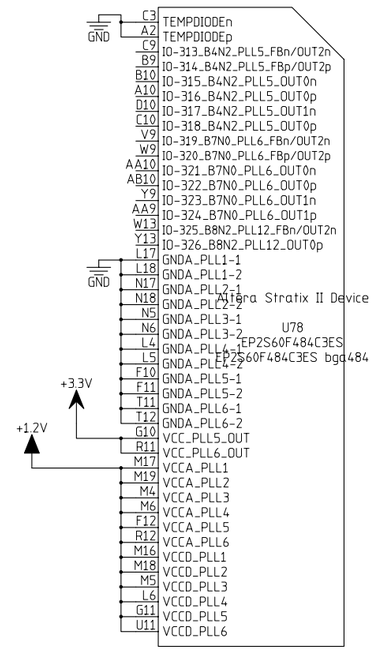

MODFIED 9/1/2004 9:58:24 AM	Other Page Number Page Total		
EED Department	ORIGINATOR	originator	DATE date
	DRAWN	drawn	DATE date
	CHECKED	checked	DATE date
	APPROVED	approved	DATE date

Fermi National Accelerator Laboratory
United States Department of Energy

D:\XFT_FINDER\XFT_FINDER\XFT_FINDER.prj

SIZE	DRAWING NUMBER	Schematic Page 01 of 01	REV
D	drawing number		A

H=8ND; V=4LA

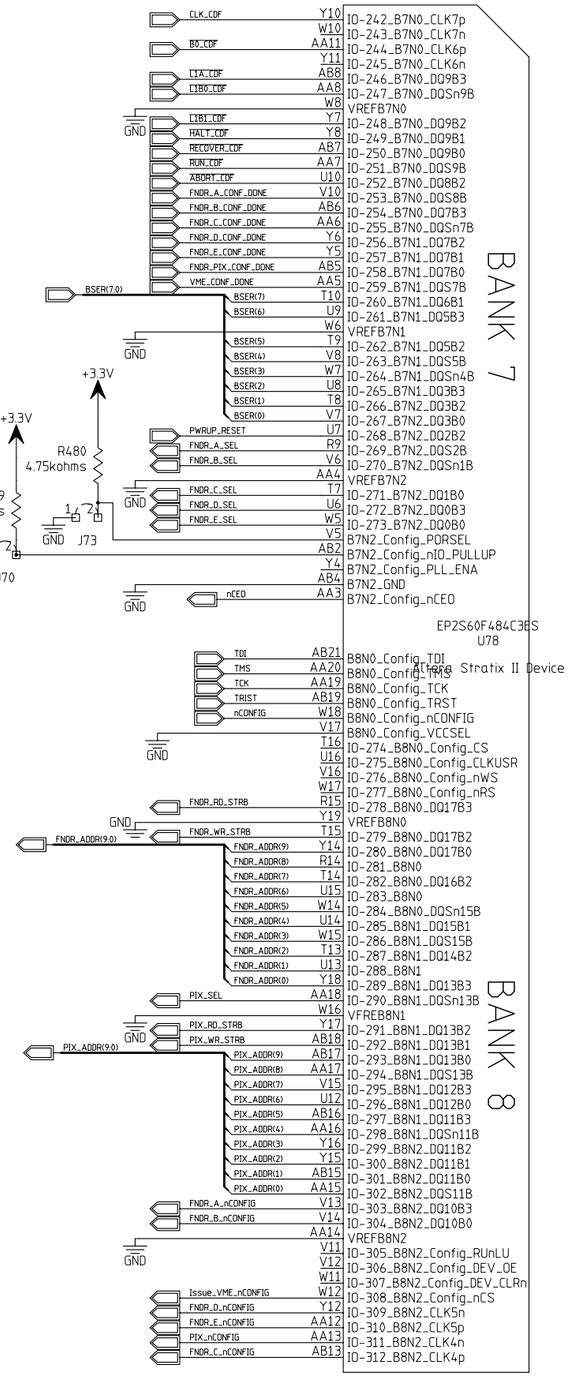

MODIFIED 9/7/2004 11:20:21 AM			Page 1 of 1
EED Department	ORIGINATOR	originator	DATE date
	DRAWN	drawn	DATE date
	CHECKED	checked	DATE date
	APPROVED	approved	DATE date

Fermi National Accelerator Laboratory
United States Department of Energy

D:\XFT_FINDER\XFT_FINDER\XFT_FINDER.prj

SIZE	DRAWING NUMBER	REV
D	drawing number Schematic Page 01 of 01	A

H=8ND, V=4LA

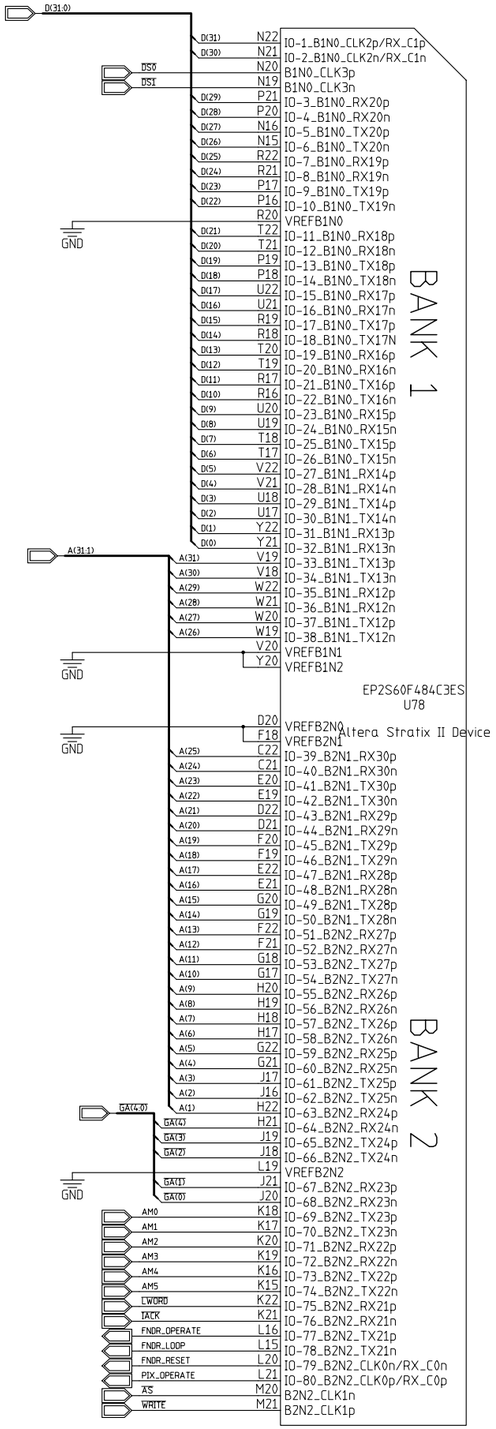

MODFIED 9/9/2004 2:44:08 PM		Page 1 of 1	
EED Department	ORIGINATOR	originator	DATE date
	DRAWN	drawn	DATE date
	CHECKED	checked	DATE date
	APPROVED	approved	DATE date

Fermi National Accelerator Laboratory
United States Department of Energy

D:\XFT_FINDER\XFT_FINDER\XFT_FINDER.prj

SIZE	DRAWING NUMBER	REV
D	drawing number	A

Schematic Page 01 of 01

H=8ND; V=4LA

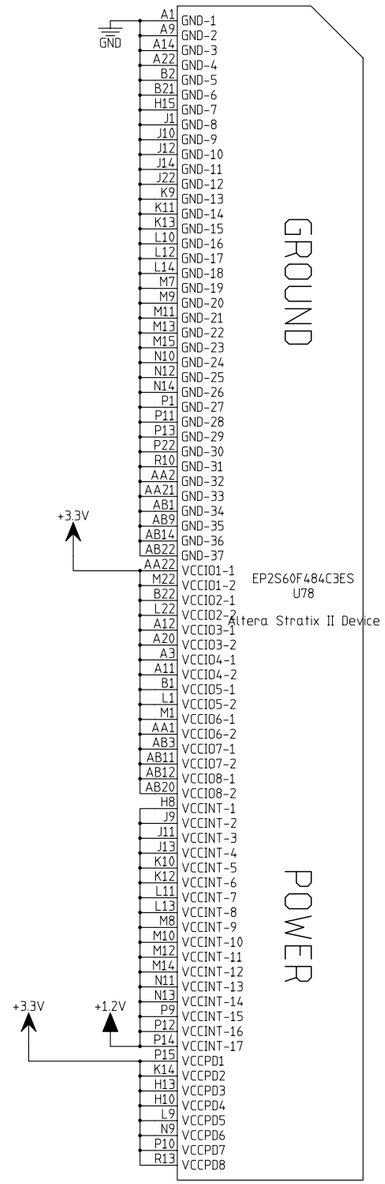

MODFIED 9/1/2004 9:58:07 AM	Other Page Number	Page Number	Total
EED Department	ORIGINATOR	originator	DATE date
	DRAWN	drawn	DATE date
	CHECKED	checked	DATE date
	APPROVED	approved	DATE date

Fermi National Accelerator Laboratory
United States Department of Energy

D:\XFT_FINDER\XFT_FINDER\XFT_FINDER.prj

SIZE	DRAWING NUMBER	Schematic Page 01 of 01	REV
D	drawing number		A

H=8ND; V=4LA

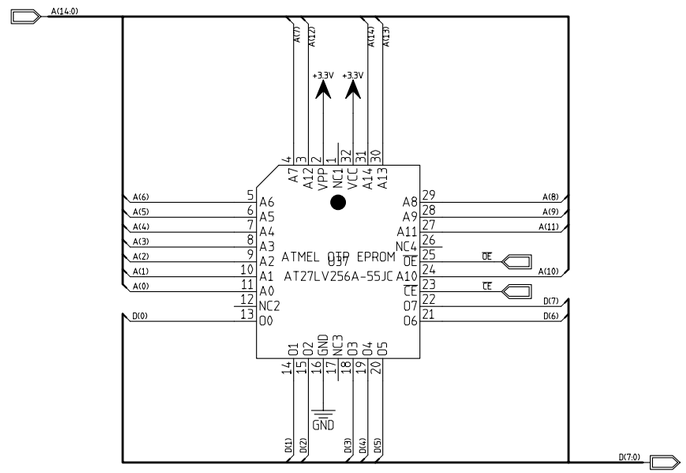

MODIFIED 8/30/2004 4:08:27 PM			
EED Department	ORIGINATOR	originator	DATE date
	DRAWN	drawn	DATE date
	CHECKED	checked	DATE date
	APPROVED	approved	DATE date

Fermi National Accelerator Laboratory
United States Department of Energy

D:\XFT_FINDER\XFT_FINDER\XFT_FINDER.prj

SIZE	DRAWING NUMBER	REV
D	drawing number	A

Schematic Page 01 of 01

H=BND, V=4LA

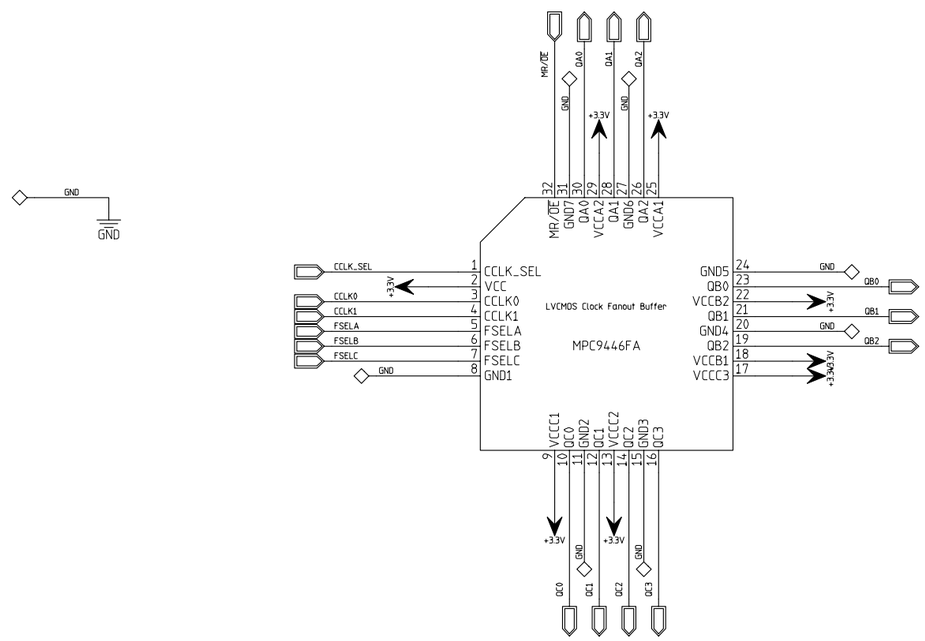

MODFIED 8/30/2004 8:22:53 AM		Page 1 of 1	
EED Department	ORIGINATOR	originator	DATE date
	DRAWN	drawn	DATE date
	CHECKED	checked	DATE date
	APPROVED	approved	DATE date

Fermi National Accelerator Laboratory
United States Department of Energy

D:\XFT_FINDER\XFT_FINDER\XFT_FINDER.prj

SIZE	DRAWING NUMBER	REV
D	drawing number	A

Schematic Page 01 of 01

H=8ND; V=4LA